AGENDA
CITY OF CREVE COEUR
PLANNING AND ZONING
300 NORTH NEW BALLAS RD
JANUARY 21, 2025
6:00 PM

CALL TO ORDER

ROLL CALL

Ms. Julie LaBonte (Chair)
Mr. Thomas Buelter
Ms. Rhonda O'Brien
Mr. Larry Potashnick
Ms. Marjorie Richter
Mr. Stephan Tomlinson
Mr. AJ Wang

Mr. Carl Lumley, City Attorney
Mr. Jason Jaggi, AICP, Director of Community Development
Ms. Bethany L. Moore, AICP, City Planner
Ms. Claralyn Bollinger, Recording Secretary

ACCEPTANCE OF THE AGENDA

APPROVAL OF MINUTES

1. **December 16, 2024 Planning and Zoning Commission Draft Meeting Minutes**

2. **January 8, 2025 Planning and Zoning Commission Special Meeting Draft Minutes**

PUBLIC COMMENT

An opportunity for members of the public to address the Planning and Zoning Commission regarding issues or concerns not already on the agenda for this meeting. Those wishing to speak will be asked to limit comments to three minutes and to complete a speaker card.

UNFINISHED BUSINESS

NEW BUSINESS

1. **Public Hearing. Application #24-034: A Conditional Use Permit for A Snack and Non-Alcoholic Beverage Bar, Tropical Smoothie Cafe, Located at 727**

N. New Ballas Road within Plaza Shops

Maulik Patel, of Shiv Ganesh, LLC, has submitted an application for a new conditional use permit to allow for Tropical Smoothie Café located at 727 N. New Ballas Road within Plaza Shops. No exterior changes are proposed and the hours of operation will be from 7:00 AM to 9:00 PM Monday-Friday, 8:00 AM to 9:00 PM Saturdays and 9:00 AM to 9:00 PM on Sundays. The property is in the "CB" Core Business zoning district. This use is classified as a Snack and Non-Alcoholic Beverage Bar (NAICS 722515) which is a conditional use that requires review and final approval by the City Council upon the recommendation of the Planning and Zoning Commission.

2. **Public Hearing. Application #24-039: A Conditional Use Permit for a Drive-Through Facility for a Comprehensive Marijuana Dispensary, Key Cannabis, Located at 105 North Lindbergh Boulevard**

Chad Hanson, of Premier Architecture Design and Build, has submitted an application on behalf of Key Cannabis Dispensary, a marijuana dispensary, located at 105 North Lindbergh Boulevard within the "GC" General Commercial zoning district, for a Conditional Use Permit to use the existing drive through at this location. NAICS CC453999 Comprehensive or Medical Marijuana Dispensary Facility provides any drive-through or drive-up portion of any such dispensary shall be a Conditional Use which requires review and final approval by the City Council upon the recommendation of the Planning and Zoning Commission.

3. **Application #24-036: A Condominium Plat for the Property Located at 10901 Olive Boulevard**

David Hutkin, of 10923 Olive Partners, LLC, has submitted an application for a condominium plat for the property located at 10901 Olive Boulevard. No changes to the site or to the existing building are proposed in conjunction with this application. Final Plats require Planning and Zoning Commission review and recommendation to the City Council for approval.

4. **Application #24-037: Public Facility Site Development Plan Approval for Sport Fields Renovations at Ladue Schools West Campus Located at 10900 Ladue Road**

Brandon Harp, P.E., of CEDC, has submitted an application on behalf of the Ladue School District, for upgrades to the Ladue Schools West Campus, at 10900 Ladue Road. The project includes increasing the number of tennis courts, expanding the

parking lot, re-arranging and upgrading the baseball field with associated facilities and adding new parking lot lighting and landscaping around the baseball field and tennis courts. Section 400.030 requires the Planning and Zoning Commission review and approval of public facilities. The Commission shall consider the application under the applicable standards established for site development plans and including but not limited, to, making a determination as to whether the proposed project is consistent with the plan and complies with the Zoning Code if applicable. City Council action is not required.

5. **Application #24-038: A Site Development Plan for the Commercial Use of a Single-Family Structure for A Hair Salon, Curl Sanctuary, Located at 11144-11148 Olive Boulevard**

Jessica McTaggart, of Curl Sanctuary, LLC, has submitted an application for a site development plan to allow for Curl Sanctuary, a hair salon, to operate as a commercial use within a single-family structure located at 11144-11148 Olive Boulevard. The structure was previously used as an animal skin care clinic. The applicant will not be making any changes to the site or appearance of the structure for their use. Hours of operation will be from 10:00 AM to 7:00 PM Monday-Friday and 10:00 AM to 3:00 PM on Saturdays with 3 employees. The property is in the “C” Single-Family Residential zoning district which allows for limited non-residential uses on state highway frontage when subject to the requirements outlined in Section 405.450(F) through Site Development Plan approval by the Planning and Zoning Commission. City Council action is not required.

WORK AGENDA

PENDING APPLICATIONS

1. 1. **Accessory Structures Text Amendment-February 18th Meeting Agenda**

DEPARTMENT REPORTS

ADJOURNMENT

Pursuant to Section 610.022 RSMo., the Planning and Zoning Commission could,

AGENDA
CITY OF CREVE COEUR
PLANNING AND ZONING
300 NORTH NEW BALLAS RD
JANUARY 21, 2025
6:00 PM

at any time during the meeting, vote to close the public meeting and move to closed session to discuss matters relating to litigation, legal actions and/or communications from the City Attorney as provided under Section 610.021(1) RSMo. and/or personnel matters under Section 610.021(13) RSMo. And/or employee matters under Section 610.021(3) RSMo. and/or real estate matters under Section 610.021(2) or other matters as permitted by Chapter 610.

Posted by: _____

Date/Time posted: _____

If you need special accommodations to attend a meeting, services may be arranged by contacting the Office of the City Administrator in advance.

DRAFT MINUTES
CITY OF CREVE COEUR
PLANNING AND ZONING
300 NORTH NEW BALLAS RD
DECEMBER 16, 2024
6:00 PM

CALL TO ORDER

ROLL CALL

Ms. Julie LaBonte (Chair) - absent
Mr. Thomas Buelter
Ms. Rhonda O'Brien
Mr. Larry Potashnick
Ms. Marjorie Richter
Mr. Stephan Tomlinson
Mr. AJ Wang - absent

Mr. Carl Lumley, City Attorney
Mr. Jason Jaggi, AICP, Director of Community Development
Ms. Bethany L. Moore, AICP, City Planner
Ms. Claralyn Bollinger, Recording Secretary and Administrative Services Supervisor

ACCEPTANCE OF THE AGENDA

Mr. Buelter made a motion to accept the agenda. Mr. Tomlinson seconded. All in favor.

APPROVAL OF MINUTES

1. **December 2, 2024 Planning and Zoning Commission Draft Meeting Minutes**

Ms. Richter made a motion to approve the minutes. Mr. Buelter seconded. All in favor.

PUBLIC COMMENT

UNFINISHED BUSINESS

NEW BUSINESS

1. **Public Hearing. #24-031: Text Amendment to the Zoning Ordinance to Amend Section 405.950. J to Provide Signage Standards for New Car Dealers**

Mr. Kendall Hutson of Custom Facilities, 10176 Corporate Square Drive, gave a presentation. Current zoning does not accommodate the branding signage that Lexus corporate requires, including Lexus name signage on the building and a sign to indicate the service area. They are not required to have a Master Signage Plan because it is a stand-alone building. This car dealership does not exceed square footage for a property that requires a Master Signage Plan.

Ms. Moore gave the city's presentation for a proposal to add new section 405.950.J to the signage code. Currently this property would be allowed one low monument sign, one 50 square foot sign per street facing façade and a few smaller directional signs. This proposed change allows two 50 square foot wall signs on each street facing side of the building, service department wall signs and non-animated traffic control signs above each service bay. One additional sign would be allowed if there were a second car brand in the building.

Mr. Buelter asked a question about the number of signs that would be allowed. Ms. Moore answered that are allowed one 50 square foot sign on each street facing side. She confirmed that the dealership is on a corner.

Ms. O'Brien asked about the signage at other dealership in the city that does not have a Master Signage Plan. Ms. Moore said that the other dealership has a sign on each street facing side

Mr. Jaggi said that the other dealership is George Weber Chevrolet and they have signage along Olive, some signage facing Highway 270 and they have a service sign.

Ms. O’Brien asked if there are any rules about capacity if there are multiple brands in a dealership. Mr. Jaggi said that if another dealership would be added to an existing dealership, a Conditional Use Permit would be required.

Mr. Tomlinson asked why add this new section to the sign code instead of amending the Master Sign Plan requirements? Ms. Moore said the Master Sign Plan is geared toward campuses or larger developments. This use is not big enough for that.

Mr. Buelter asked about the proposed signage changes. Ms. Moore said if another dealership is added, they would get one more sign.

Mr. Lumley offered the exhibits into the record. Mr. Buelter moved to accept the new zoning ordinance. Mr. Tomlinson seconded. Roll call vote and all voted in favor.

DRAFT MINUTES
CITY OF CREVE COEUR
PLANNING AND ZONING
300 NORTH NEW BALLAS RD
DECEMBER 16, 2024
6:00 PM

WORK AGENDA

PENDING APPLICATIONS

DEPARTMENT REPORTS

There will be a special meeting on Wednesday, January 8 at 6:00 p.m. on the Olia Village tree plan. More information will be sent.

ADJOURNMENT

Meeting adjourned at 6:20 p.m.

Submitted by:

Recording Secretary

Chair

MINUTES
CITY OF CREVE COEUR
PLANNING AND ZONING
300 NORTH NEW BALLAS RD
JANUARY 8, 2025
6:00 PM

CALL TO ORDER

ROLL CALL

Ms. Julie LaBonte (Chair)
Mr. Thomas Buelter – absent
Ms. Rhonda O'Brien
Mr. Larry Potashnick
Ms. Marjorie Richter
Mr. Stephan Tomlinson – absent
Mr. AJ Wang

Mr. Carl Lumley, City Attorney
Mr. Jason Jaggi, AICP, Director of Community Development
Ms. Bethany L. Moore, AICP, City Planner – on zoom
Ms. Claralyn Bollinger, Recording Secretary and Administrative Service Supervisor

ACCEPTANCE OF THE AGENDA

Agenda accepted by acclimation.

APPROVAL OF MINUTES
No minutes were approved at this meeting.

PUBLIC COMMENT

UNFINISHED BUSINESS

NEW BUSINESS

1. **Public Hearing. Application #24-035. An Amendment to the Olia Village Planned Zoning District Site Concept Plan and Phase 1 Site Development Plan Affecting the Tree Preservation Plan and Phase 1 Planting Plan.**

Speakers were sworn in.

Mr. Jaggi gave the staff report. Ms. Moore participated via Zoom. The Olia Village plan was approved in 2023 and that included Olia Village development standards. In accordance with the redevelopment agreement, the City has hired consultants to assist the City staff, including a civil engineer and a landscape architect. A certified arborist was hired by the developer. Tree protection fencing was installed prior to any tree removals and the fencing was inspected by staff and the consulting landscape architect. Dead, diseased or

hazardous trees were approved to be removed in accordance with the Olia Village development standards.

Portions of the plan are not at issue with the tree removal plan. Tonight, we are discussing the amendment to site concept plan's amended tree preservation plan and Phase 1 planting plan. The Planning and Zoning Commission will be the recommending body to City Council on this matter. Section 1A of the retaining wall as shown by a red line on map provided by Mr. Jaggi indicates the trees adjacent to the proposed retaining wall are what is being discussed tonight.

According to the developer, more overdig has to occur to structurally set the retaining wall properly than was originally thought to be required. Six nineteen-inch-diameter trees are to be replaced on a 1:1 basis. About 30 additional trees will need to be removed than were in the original plan. 27 are in fair to better condition, most are evergreens.

Twenty feet from the retaining wall will be an additional buffer zone. Fifty feet from the bottom of the retaining wall to the property boundary will be a buffer zone too so there is a seventy-foot total buffer zone on the southern portion.

The revised tree preservation plan looks at all the trees in much finer detail. The new plan focuses on new trees with some existing trees. To be replaced are 21 canopy trees, 267 evergreen trees, 20 ornamental trees and 89 shrubs. Minimum height is 8 feet for canopy trees and minimum size diameter of deciduous trees is 2 ½ caliper inches.

Questions:
Ms. LaBonte: How many trees are considered to be dead or diseased?
Mr. Jaggi: Not sure of the exact number. Many ash trees have signs of the Emerald Ash Borer disease. The idea is that they should be removed now while having access to them.

Mr. Matt Pfund, with Jack Matthews Development gave the Olia Village presentation. The wall will be a Ready Rock Wall. Each retaining wall block is 48" wide x 18" tall x 24" deep and weighs 1,700 pounds. The tallest section will have fifteen layers of tiebacks into the soil. This was originally planned to be a Mechanically Stabilized Earth wall (MSE wall). It has now been modified to be a Geosynthetic Reinforced Soil (GRS) wall. The wall is coordinated with many other features of the development plan. We need to put down a lot of rock underneath the soil.

There will be 860 feet of retaining wall: 200 feet long along Spoede Woods and 660 feet long along Ramblewood and Mission Hills neighborhoods.

5 trees along Spoede Woods need to be removed; will replace with 19 trees, one tree every ten feet. 15 trees along Ramblewood and Mission Hills need to be removed; will be replaced with 60 trees. The trees will be layered in depth and height.

397 new plants now with revision versus 318 plants originally to be

installed.

Questions:

Ms. Richter: What did you discover about the soil that made you have to change the retaining wall?

Mr. Pfund: Some clay soils were found which was a concern to the engineers in regard to possible rotational failure and pressures on the retaining wall.

Ms. LaBonte: Can you speak to the size of the replacement trees? There are some pretty big trees that will be replaced.

Wes Haid with SWT Design (consulting landscape architect's firm): There are different sizes for the evergreens and deciduous trees. Evergreens will be 8 feet tall and 4-7 feet wide at the bottom. Deciduous trees will be 14-21 feet tall on day one. The ornamental trees will be 2 ½ inch caliper and 8-12 feet tall.

Ms. LaBonte: How long will it take the evergreens to get back to the size of the ones being removed?

Mr. Haid: That is a difficult question to answer. A lot of it depends on amount of annual rainfall and soil quality. Any answer I give will be speculation since tree growth depends on many factors.

Ms. O'Brien: What about given the ideal quality situation?

Mr. Haid: It will take 20, 30, 40 years to get a mature deciduous tree, depending on species.

Ms. LaBonte: We got a note from Rachel Protzel dated January 2, 2025 that there wasn't much communication with the neighbors. Has this changed?

Mr. Pfund: Rachel and her two neighbors have a lot of sewer activity that's part of the drainage there and it will need more discussion. We will try to give at least a week's notice when we are working right outside their fence. There will be some unique plantings that will need to be done. Mr. Jaggi has the authority to indicate where more plants will need to be placed. We are updating our website with more of our contact information. From a newsletter standpoint it is a bit more difficult to explain. We can be more directly specific with the neighbors.

Mr. Lumley offered exhibits into the record. Mr. Wang moved, and Mr. Potashnick seconded to recommend approval of the amendments to the City Council as stated in the staff memo. All voted in favor.

WORK AGENDA

Next regular meeting is Tuesday, January 21 and this will be the day after the Dr. Martin Luther King, Jr. holiday.

Mr. Potashnick won't be at the next meeting. Ms. LaBonte, Ms. Richter, Ms. O'Brien and Mr. Wang will attend on January 21. Unknown attendance status for Mr. Buelter and Mr. Tomlinson.

PENDING APPLICATIONS

1.
- **24-034: 727 N. New Ballas Road, Tropical Smoothie Cafe CUP Application**
- **24-036: 10901 Olive Boulevard, Condo Plat Application**
- **24-037: 10900 Ladue Road, Ladue Schools Public Facilities Application**
- **24-038: 11144 Olive Boulevard, Curl Sanctuary, LLC Site Development Plan Application**
- **24-039: 105 N. Lindbergh Boulevard, Key Cannibas Drive Through CUP Application**

DEPARTMENT REPORTS

ADJOURNMENT

Meeting adjourned at 6:44 p.m.

Submitted by:

_____ _____

Recording Secretary Chair

city of CREVE COEUR

300 North New Ballas Road • Creve Coeur, Missouri 63141

(314) 432-6000 • Fax (314) 872-2539

APPLICATION TO PLANNING AND ZONING COMMISSION #24-034: A CONDITIONAL USE PERMIT FOR A SNACK AND NON-ALCOHOLIC BEVERAGE BAR, TROPICAL SMOOTHIE CAFE, LOCATED AT 727 N. NEW BALLAS ROAD WITHIN PLAZA SHOPS

FOR THE MEETING OF: Tuesday, January 21st, 2025, 6:00 PM

LOCATION: 727 N. New Ballas Road, within Plaza Shops. Zoned "CB" Core Business District

REQUEST: Maulik Patel, of Shiv Ganesh, LLC, has submitted an application for a new conditional use permit to allow for Tropical Smoothie Café located at 727 N. New Ballas Road within Plaza Shops. No exterior changes are proposed, and the hours of operation will be from 7:00 AM to 9:00 PM Monday-Friday, 8:00 AM to 9:00 PM Saturdays and 9:00 AM to 9:00 PM on Sundays. The property is in the "CB" Core Business zoning district. This use is classified as a Snack and Non-Alcoholic Beverage Bar (NAICS 722515) which is a conditional use that requires review and final approval by the City Council upon the recommendation of the Planning and Zoning Commission.

ADDITIONAL INFORMATION: Under Section 405.370, Table A of the Zoning Code, NAICS 722515 requires the issuance of a conditional use permit in the "CB" zoning district subject to the recommendation of the Planning and Zoning Commission and approval of the City Council.

Key Issues:
- Does the request further the goals and/or implement the Comprehensive Plan?
- Is the request consistent with the required findings for a conditional use permit?

Creve Coeur 2030 Plan References
- Central Business District
- Design Guidelines

Zoning Code References
- Section 405.370: CB-Core Business District
- Section 405.470: Conditional Use Permit

APPLICANT: Maulik Patel
Shiv Ganesh, LLC
663 Brighton Heights Court
Des Peres, MO 63131

PROPERTY OWNER: CH Retail Fund 1 St Louis Plaza Shops
3819 Maple Ave
Dallas, TX 75219

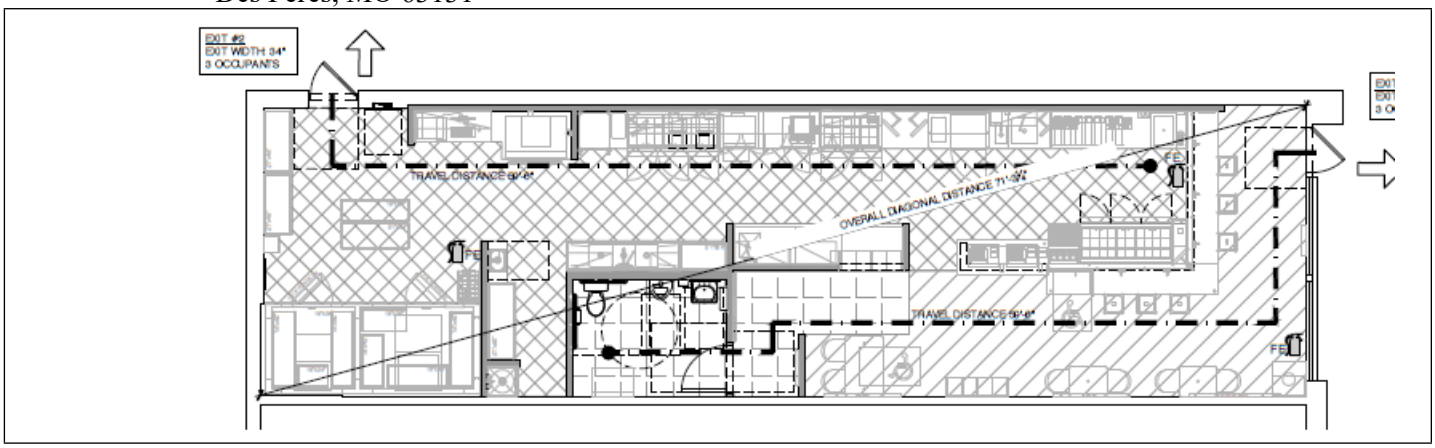

REPORT PREPARED BY: Bethany Moore, City Planner
DATE: 1/10/2025
ATTACHMENTS: Applicant's Materials received 12/13/24
Draft Ordinance

BACKGROUND:
The Plaza Shops shopping center, located north of Studt Avenue and west of N. New Ballas Road, was approved and constructed in 1983 in compliance with City of Creve Coeur's zoning regulations in the "CB" Core Business zoning district. This site has pre-existing non-conformities in relation to the current zoning code. The center consists of five buildings, currently housing 16 tenant spaces, totaling approximately 26,000 square feet. The subject tenant space was previously vacant for several years. Plaza Shops currently has 13 tenants and 3 vacancies. Tropical Smoothie Cafe will be occupying 1,400 square feet within Building C of the 5-building shopping center.

PROJECT DESCRIPTION
The Applicants are seeking approval for a new conditional use permit for Tropical Smoothie Cafe, a fast-food franchise focused on offering healthy food options such as smoothies made from fresh ingredients, breakfast bowls, quesadillas and wraps. The business is mostly geared toward carry out options, but 14 indoor seats will be provided for customers who wish to consume the products on site. The proposed space is 1,400 square feet and no changes to the exterior of the building, or the site are proposed in association with this application. Hours of operation are 7:00 AM to 9:00 PM Monday-Friday, 8:00 AM to 9:00 PM on Saturdays and 9:00 AM to 9:00 PM on Sundays with 3 employees at busiest shift. Tropical Smoothie Café is currently open and operating under a temporary occupancy permit until the CUP is approved. The applicant had already completed all interior work, per their approved building permits, and were ready to open when they were informed that a CUP was required. Due to the fact that the restaurant has less than 16 seats and was making no exterior changes with no anticipated concerns with this request, the Building Division and the Planning Division agreed to issue a temporary occupancy permit pending final approval of the conditional use permit request by the Planning and Zoning Commission and City Council. The applicants have provided their consent of this arrangement to staff prior to opening.

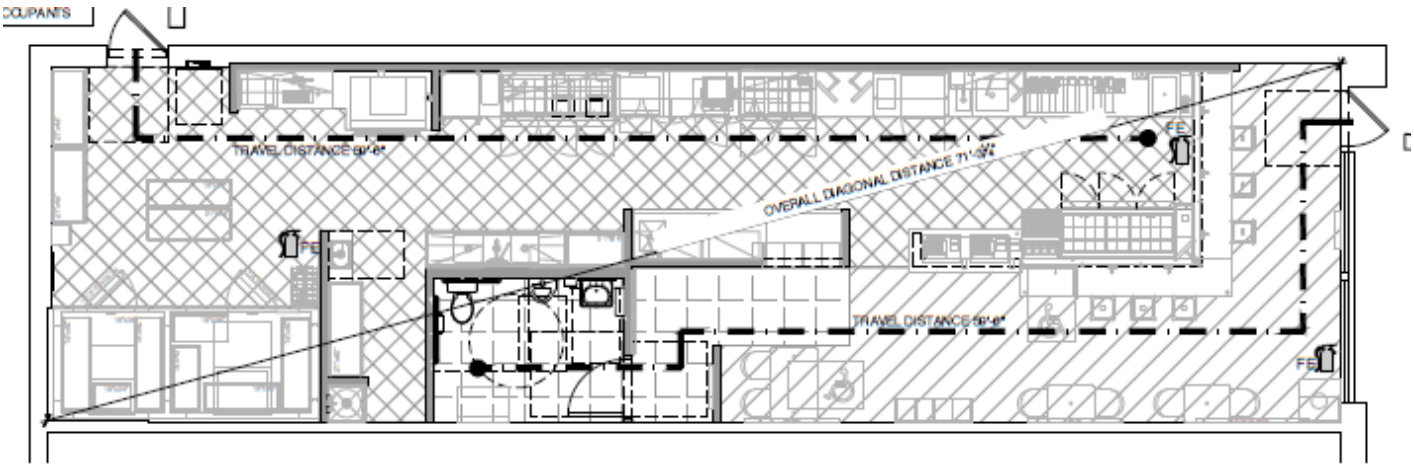

Figure 1: Proposed Floor Plan.

Figure 2: Proposed Location Site Plan. Tropical Smoothie shown in red circle.

LAND USE AND ZONING OF SURROUNDING PROPERTIES

The adjacent zoning and land uses are as follows:

DIRECTION	USE	ZONED	SEPARATED BY
North	Commercial	CB-Core Business	N/A
South	Commercial	CB-Core Business	Studt Road
East	Commercial	CB-Core Business	N. New Ballas Road
West	Commercial	CB-Core Business	Decker Lane

COMPREHENSIVE PLAN REVIEW

Creve Coeur 2030 Plan

The *Creve Coeur 2030* Plan includes the overall goal for Placemaking & Community Identity by creating mixed-use, walkable districts (p. 45), and the long-term Economic Growth & Community Services goal of providing community services, amenities, and experiences necessary to leverage and capture the changing consumer preferences for more lifestyle centers (p. 47). The subject property is located within the Mixed-Use District (MU) place type that has a vision to create a visually-distinctive and regionally-recognized commercial corridor that improves walkable and bikeable access to retail and service businesses for the "day-to-day" use of Creve Coeur's residents and workers. The MU Place type supports the development of a variety of medium-density commercial, retail, office, institutional, dining, community services, and multi-family residential within a suburban context. These land uses are supported primarily through vehicular access with improved walkability, pedestrian connections to adjacent neighborhoods, and beautifully landscaped street frontages. (p. 82). The applicant is filling a space within a commercial building at Plaza Shops. No changes to the exterior of the building or site are proposed. Therefore, the use within the Plaza is consistent with the Comprehensive Plan as much as this proposal can be.

ZONING REVIEW
NAICS 722515 Snack and Non-Alcoholic Beverage Bars are permitted as conditional uses with review and approval by the City Council upon the recommendation of the Planning and Zoning Commission in all of the commercial districts of the City. The entire Plaza Shops complex is 2.83 acres with approximately 26,000 square feet of retail space. The proposal is for 1,400 square feet thus representing roughly 5% of the complex's square footage.

Parking:
Parking regulations for eating and drinking establishments with less than 16 seats are discussed under Section 405.820(F)(5)(b) which requires parking spaces to be required at the ratio for basic retail uses, 4/1000 square feet of floor area. The proposed space is 1,400 square feet with 14 indoor seats so 6 parking spaces are required.

Below is the current parking table for the entire center:

Tenant	Use	Size (sq. ft.)	Parking Regulations	# of spaces
701 New Ballas – Sauce on the Side	Restaurant (75 indoor seats)	3120	*1/3 seats in C.U.P. + 1/250 sq. ft..*	38
707 New Ballas – Town and Country Bank	General Retail	1500	*4/1000 sq. ft*	6
711 New Ballas – Edward Jones	Other Financial Services	1560	*4/1000 sq. ft.*	7
713 New Ballas – Excel Sports and Physical Therapy	General Retail	1575	*4/1000 sq. ft.*	7
715 New Ballas – Vacant	General Retail	1050	*4/1000 sq. ft.*	5
717 New Ballas – Hot Box Cookies	Restaurant < 16 Seats	1400	*4/1000 sq. ft.*	6
721 New Ballas – Oishi Sushi	Restaurant (94 indoor seats)	2800	*1/3 seats in C.U.P. + 1/250 sq. ft.*	44
725 New Ballas – Feng Cha	Restaurant < 16 Seats	1319	*4/1000 sq. ft.*	6
727 New Ballas – Tropical Smoothie Cafe	**Restaurant < 16 Seats**	**1400**	***4/1000 sq. ft.***	**6**
731 New Ballas – Nail Salon	Services – Nail Salon	1643	*4/1000 sq. ft.*	7
733 New Ballas – Zang Chi	Restaurant < 16 seats	1190	*4/1000 sq. ft.*	5
735 New Ballas – Vacant	General Retail	1358	*4/1000 sq. ft.*	6
737 New Ballas – Vacant	General Retail	1038	*4/1000 sq. ft.*	5
741 New Ballas –Fleur Bridal	General Retail	919	*4/1000 sq. ft.*	4
743-745 New Ballas – Eyewearhouse	General Retail	2100	*4/1000 sq. ft.*	9
747 New Ballas – Lab Corp	Other Health Services	2040	*4/1000 sq. ft.*	9
			Sub-total:	170
			Minus 15% Reduction	-26
			Total # of Parking Spaces Required:	**144**
			Total Available On-site:	**165**
			Excess Parking:	**21**

OTHER REVIEW ITEMS
Trash for the restaurant will utilize the existing dumpster located behind the building. The dumpster enclosure is in good repair.

RECOMMENDED CONDITIONS FOR APPROVAL
Based on the above analysis, the request for a conditional use permit appears to meet all of the requirements of the Zoning Ordinances and is not inconsistent with the goals and objectives of the Comprehensive Plan. Should the Planning and Zoning Commission view this request favorably, staff recommends the approval be subject to the conditions below which are included in the draft ordinance:

1. The Conditional Use Permit shall be for the operation of an approximately 1,400 square foot Snack and Non-Alcoholic Beverage Bar, NAICS 722515, establishment at 727 North New Ballas Road, within Plaza Shops.
2. Maximum seating permitted is limited to 16 indoor seats. The Zoning Administrator may authorize additional indoor or outdoor seating, based upon a complete review of the parking for Plaza Shops to ensure zoning code compliance.
3. Hours of operation shall be from 7:00 AM to 9:00 PM Monday-Friday, 8:00 AM to 9:00 PM on Saturdays and 9:00 AM to 9:00 PM on Sundays. Additional business hours may be permitted with the Zoning Administrator's approval including, but not limited to, the catering of special events.
4. Employee vehicles, delivery and company vehicles shall be parked behind the buildings.
5. All signs and banners shall be in conformance with Article VIII, Sign Regulations, of the Zoning Code and require permit approval.
6. Any future enlargement, extension, expansion, or alteration in the use of the structures or site must be approved by the City Council upon receipt of the recommendation of the Planning and Zoning Commission as an amendment to the Conditional Use Permit before a Building Permit for the enlargement, expansion or alteration may be issued.
7. Failure to comply with any one or all of the conditions of this permit shall be adequate cause for the revocation of said permit by the City Council, provided, however, no permit shall be revoked without prior notice to the owner of the intention of the City Council to revoke this permit and reasonable time granted to the owner to correct or remedy any such breach of conditions, except for repeated breaches or violations.
8. No conditional use permit granted by the City Council shall be valid for a period longer than one year from the date it grants the conditional use permit, unless within such period: (1) a building permit is obtained and construction is begun; or (2) if a building permit is not required, an occupancy permit is obtained, and the use of the building commenced. The City Council may grant extensions to the one (1) year period of not more than one hundred and eighty (180) days each, without notice or hearing, provided that a written request for such extension is filed by the original applicant and approved by the City Council prior to the date the conditional use permit is scheduled to expire.
9. Any transfer of ownership or lease of the property shall include in the transfer or lease agreement a provision that the purchaser or lessee agrees to the conditions herein set forth, and written confirmation thereof signed by the new owner or lessee shall be filed with the City at the time of such transfer or lease. Failure to comply with this provision shall not excuse anyone from these conditions.

ACTION
If the Planning and Zoning Commission finds the attached draft conditional use permit ordinance to be in conformance with the purposes and regulations of the Comprehensive Plan and Zoning Code, it may vote on a recommendation to the City Council. Any changes to the draft ordinance should be discussed and made by separate actions.

MOTION
The following is an example of an appropriate motion for this application:

> "I move to recommend approval of a Conditional Use Permit for Tropical Smoothie Cafe located at 727 N. New Ballas Road, within Plaza Shops, subject to the conditions discussed in the Staff Report and Draft Ordinance for the meeting of January 21, 2025" (conditions may be added, eliminated, or modified by preceding motion).

APPENDIX 1: COMPREHENSIVE PLAN, INCLUDING DESIGN GUIDELINES
Included and attached by reference. See body of report for specific excerpts.

APPENDIX 2: ZONING CODE
Included and attached by reference. See body of report for specific excerpts.

APPENDIX 3: AERIAL PHOTO

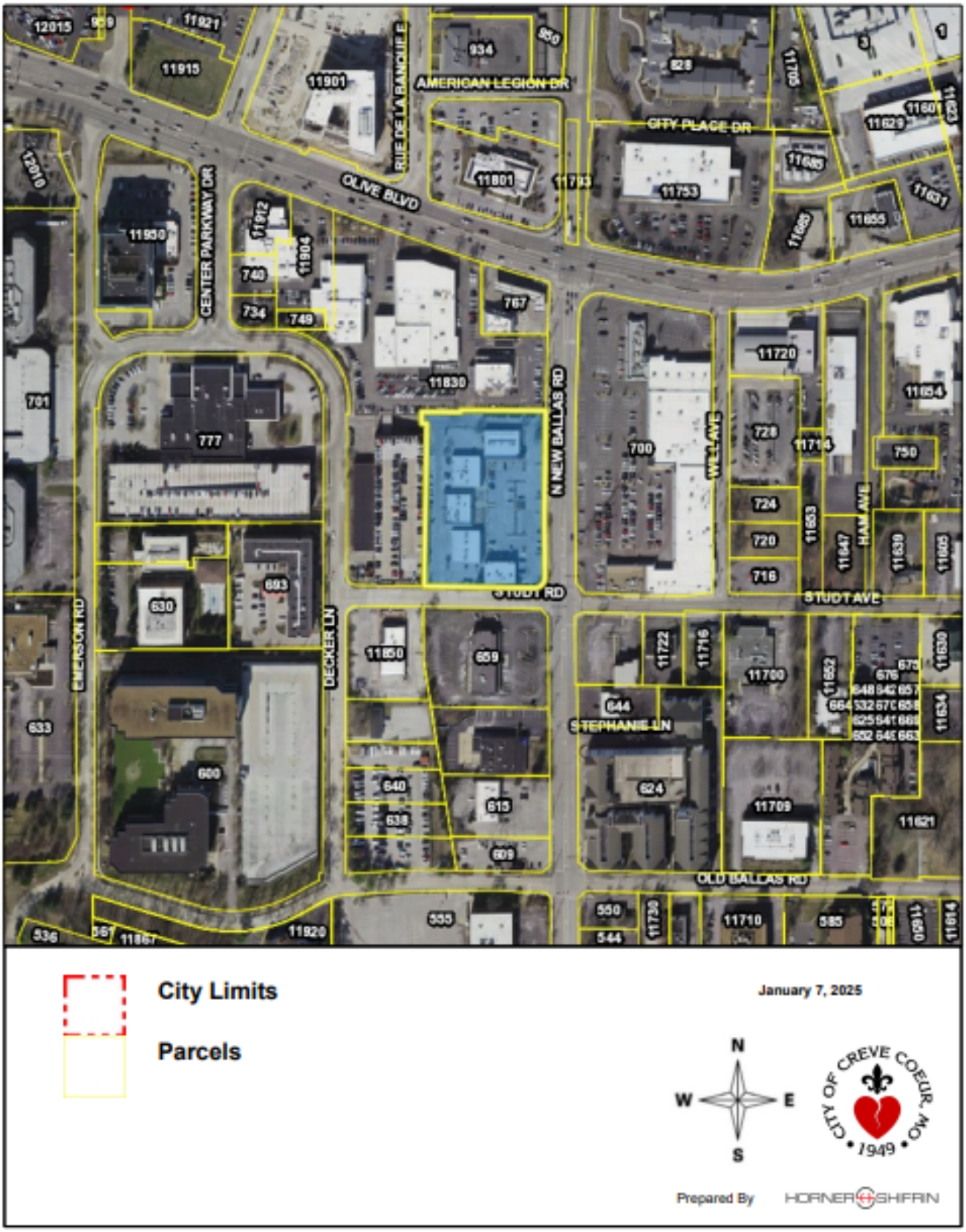

BILL NO. _____ ORDINANCE NO. _____

AN ORDINANCE AUTHORIZING THE ISSUANCE OF A CONDITIONAL USE PERMIT FOR A 1,400 SQUARE-FOOT SNACK AND NON-ALCOHOLIC BEVERAGE BAR, TROPICAL SMOOTHIE CAFE, LOCATED AT 727 NORTH NEW BALLAS ROAD, WITHIN THE PLAZA SHOPS

WHEREAS, under Section 405.360(C), snack and non-alcoholic beverage bars in the "CB", Core Business zoning district require the issuance of a conditional use permit as provided in Section 405.1070, Conditional Use Permits; and

WHEREAS, Maulik Patel, of Shiv Ganesh, LLC, submitted an application for a conditional use permit for a 1,400 square foot snack and non-alcoholic beverage bar, Tropical Smoothie Cafe, at 727 N. New Ballas, within the Plaza Shops; and

WHEREAS, a public hearing was held by the Creve Coeur Planning and Zoning Commission on Tuesday, January 21, 2025, beginning at 6:00 p.m. or immediately following the close of the previous public hearing, on said application for the conditional use permit as provided by Section 405.1070(D)(2); and

WHEREAS, notice of publication for said public hearing had been previously published at least 15 days prior to the hearing, in the St. Louis Countian, a newspaper of general circulation in the City of Creve Coeur; and

WHEREAS, the Planning and Zoning Commission reviewed and, by a __ vote, recommended approval of the conditional use permit, subject to the conditions contained herein, at its meeting on January 21, 2025; and

WHEREAS, all parties desiring to be heard, either for or against said application, were given an opportunity to be heard, and a copy of the proposed ordinance has been made available for public inspection prior to its consideration by the Council; and this Bill having been read by title in open meeting two times before final passage by the City Council, and

WHEREAS, the City Council finds that the application and evidence presented clearly indicate that the proposed conditional use, when subject to certain conditions set forth herein:

1. Complies with all applicable provisions of this Zoning Ordinance Chapter 405 including but not limited to environmental performance standards presented in Section 405.550, the criteria in Section 405.470 and the standards of this chapter in regard to yard and setback, parking and loading areas, screening and buffering, refuse, storage and service areas and signs.
2. Will contribute to and promote the welfare and convenience of the community at the specific location.
3. Will not cause substantial injury to the value of neighboring property.
4. Is consistent with the applicable provisions of the City's Comprehensive Plan and any applicable neighborhood or sector plans, unless good cause is demonstrated for deviation there from.
5. Will provide, if applicable, erosion control and on-site stormwater detention in accordance with the standards contained in this Chapter.
6. Will be compatible with the surrounding area and thus will not impose an excessive burden or have a substantial negative impact on surrounding or adjacent users or on pedestrian

or vehicular traffic or on community facilities or services, including but not limited to emergency services.

NOW, THEREFORE, be it ordained by the City Council of the City of Creve Coeur, St. Louis County, Missouri, as follows:

Section 1: A Conditional Use Permit is authorized to be issued pursuant to Section 3 hereof for the operation of a snack and non-alcoholic beverage bar located at 727 N. New Ballas Road, in the "CB" Core Business zoning district, within the Plaza Shops, whose legal description is as follows:

Parcel A

A tract of land being Lot "A' of the Boundary Adjustment Plat of a tract of land being part of Lots 3 and 4 of Studt's Home Place and part of Lot 7 of The Lake House Farm Subdivision and part of vacated Decker Lane, according to the Plat thereof recorded in Book 345, page 557 of the St. Louis County Records.

Parcel B

A tract of land being Lot I of Weller Manor, according to the Plat thereof recorded in Book 105, page 1 of the St. Louis County Records and part of Lot 5 of Studt's Home Place according to the plat thereof recorded in Book 7 page 38 of the St. Louis County Records of the St. Louis County Records, situated within Section3, Township 45 North, Range 5 East, in the City of Creve Coeur, St. Louis County, Missouri, being more particularly described as follows:

Beginning at the point of on the Eastern Right of Way line of Decker Lane forty feet wide, at the Northwestern comer of Lot 2 of Weller Manor, as aforementioned; thence along said Eastern line and the Eastern line of land conveyed to the City of Creve Coeur (for the widening of Decker Lane), by Deed recorded in Book 7505, page 1930 of the St. Louis County Records, North 00 ° 52 minutes 55 seconds West, 200.57 feet to a point of curvature; thence Southwestwardly 39.65 feet, along a curve to the right having a radius of 25.00 feet and a chord bearing North 44 ° 35 minutes 32 seconds East to a point of tangency on the southern Right of Way line of Studt Avenue as widened to fifty feet by the Deed to ·the City of Creve Coeur, as aforementioned; thence along said Southern line East, 161.61 feet to a point on the Western line of a tract of land conveyed to Rose-Gold Nomen Company, by deed recorded in Book 6486 page 1867 of the St. Louis County Records; thence along Western line, South 00 ° 52 minutes 55 seconds East, 129.61 feet to a point; thence South 09 ° 42 minutes 03 seconds East, 94.59 feet to the Northeastern comer of Lot 2 Weller Manor, as aforementioned, thence along the Northern line of Lot 2, South 89 ° 07 minutes 05 seconds West, 201.38 feet to the point of beginning.

Section 2: The Conditional Use Permit granted shall be subject to all applicable statutes, ordinances, rules and regulations, and the following conditions:

1. The Conditional Use Permit shall be for the operation of an approximately 1,400 square foot Snack and Non-Alcoholic Beverage Bar, NAICS 722515, establishment at 727 North New Ballas Road, within Plaza Shops.
2. Maximum seating permitted is limited to 16 indoor seats. The Zoning Administrator may authorize additional indoor or outdoor seating, based upon a complete review of the parking for Plaza Shops to ensure zoning code compliance.

3. Hours of operation shall be from 7:00 AM to 9:00 PM Monday-Friday, 8:00 AM to 9:00 PM on Saturdays and 9:00 AM to 9:00 PM on Sundays. Additional business hours may be permitted with the Zoning Administrator's approval including, but not limited to, the catering of special events.
4. Employee vehicles, delivery and company vehicles shall be parked behind the buildings.
5. All signs and banners shall be in conformance with Article VIII, Sign Regulations, of the Zoning Code and require permit approval.
6. Any future enlargement, extension, expansion, or alteration in the use of the structures or site must be approved by the City Council upon receipt of the recommendation of the Planning and Zoning Commission as an amendment to the Conditional Use Permit before a Building Permit for the enlargement, expansion or alteration may be issued.
7. Failure to comply with any one or all of the conditions of this permit shall be adequate cause for the revocation of said permit by the City Council, provided, however, no permit shall be revoked without prior notice to the owner of the intention of the City Council to revoke this permit and reasonable time granted to the owner to correct or remedy any such breach of conditions, except for repeated breaches or violations.
8. No conditional use permit granted by the City Council shall be valid for a period longer than one year from the date it grants the conditional use permit, unless within such period: (1) a building permit is obtained and construction is begun; or (2) if a building permit is not required, an occupancy permit is obtained, and the use of the building commenced. The City Council may grant extensions to the one (1) year period of not more than one hundred and eighty (180) days each, without notice or hearing, provided that a written request for such extension is filed by the original applicant and approved by the City Council prior to the date the conditional use permit is scheduled to expire.
9. Any transfer of ownership or lease of the property shall include in the transfer or lease agreement a provision that the purchaser or lessee agrees to the conditions herein set forth, and written confirmation thereof signed by the new owner or lessee shall be filed with the City at the time of such transfer or lease. Failure to comply with this provision shall not excuse anyone from these conditions.

Section 3: The City Administrator of the City of Creve Coeur is hereby authorized and directed to issue a Conditional Use Permit in accordance with the provisions of this ordinance, said permit to expressly provide for the conditions and stipulations hereinabove set out in Section 2 of this ordinance. Exercise of the rights granted pursuant to the issued permit shall constitute acceptance of all conditions and stipulations set forth herein.

Section 4: This ordinance shall become effective in accordance with Section 3.11 (g) of the City Charter.

ADOPTED THIS ____ DAY OF _____, 2025.

_____
TIM CARNEY
PRESIDENT OF CITY COUNCIL

BILL NO. _____ **ORDINANCE NO. _____**

APPROVED THIS ____ DAY OF _____, 2025.

_____
DR. ROBERT
HOFFMAN
MAYOR

ATTEST:

_____

KELLIE HENKE
CITY CLERK

We are excited to be bringing Tropical Smoothie Cafe here to Creve Coeur. Tropical Smoothie Cafe is a fast food establishment, that focuses on healthy food options. We sell smoothies made from fresh ingredients, as well as food ranging from breakfast bowls, quesadillas, and wraps. We will be taking over a vacant space in Plaza Shops located at 727 N New Ballas Road, Creve Coeur MO 63141. We will not be doing any work on the exterior of the building, just inside the space to turn it into a Tropical Smoothie Cafe. Construction is completed at this moment with all permits approved, during construction local tenants and businesses were not affected. In our Plaza we have other food vendors as well, so changing our use to food will not have a negative impact. We anticipate increasing foot traffic in our local area. Other food vendors include: Sauce on the Side, Oishi Sushi, Hot Box Cookies, Zang Chi, and Feng Chai Boba Tea.

RESPONSIBILITY MATRIX

NO.	QTY	EQUIPMENT DESCRIPTION	PROVIDER	VENDOR	INSTALLER
		GENERAL REQUIREMENTS (DIVISION 1)			
*		BUILDING PERMIT	F	LJ	
		PERMIT FEES	F	LJ	
		UTILITIES	F	UC	
		FIELD VERIFY ALL EXISTING CONDITIONS	GC	GC	
		TEMPORARY FACILITIES	GC	CC	GC
		TRASH REMOVAL / CLEAN UP	GC	CC	GC
		CONCRETE (DIVISION 3)			
		SLAB - NEW POUR / EXISTING	GC	CC	GC
		FLOOR/SLAB MOISTURE TEST	GC	CC	GC
		METALS, WOOD & PLASTICS (DIVISION 5 & 6)			
		KNEE WALLS	GC	GC	GC
		WALLS / BULKHEADS	GC	CC	GC
		UNISTRUTS, THREADED RODS, RAILINGS, BRACKETS	GC	CC	GC
		STRUCTURAL STEEL, SUPPORTS, BRACES, ETC	GC	CC	GC
		FRAMING / CARPENTRY	GC	CC	GC
		WALL CABINETS	F	EV	EV
		SOLID SURFACE COUNTER TOP	F	EV	EV
		BUTCHER BLOCK COUNTER TOP	F	EV	EV
		MILLWORK SOFFIT	F	EV	EV
		THERMAL & MOISTURE PROTECTION (DIVISION 7)			
		ROOF PENETRATIONS	GC	CC	GC
		EXHAUST FAN CURB ON ROOF	GC	CC	GC
		DOORS & WINDOWS (DIVISION 8)			
		NEW DOORS, FRAMES & HARDWARE	GC	CC	GC
		NEW GLASS STOREFRONT	GC	CC	GC
		FINISHES (DIVISION 9)			
		WALL FINISHES (GYPSUM BOARD & FRP PER PLAN)	GC	CC	GC
		WALL FINISHES (PAINT, TILE, SPECIALTY)	GC	SFS	GC
		CEILING AND SUSPENSION GRID	GC	SFS	GC
		WOOD TRIM / FINISHES	GC	SFS	GC
		FLOORING FINISHES	GC	SFS	GC
		WALL BASE	GC	SFS	GC
		FIRE RATED PENETRATIONS CAULK & SEALANTS	GC	CC	GC
		SPECIALTIES (DIVISION 10)			
		SIGNAGE PERMIT (EXTERIOR) & INSTALL	F	SC	SC
		INTERIOR SIGNS	GC	GC	GC
		MALE AND FEMALE RESTROOM SIGNS	GC	GC	GC
		RESTROOM ACCESSORIES	GC	GC	GC
**		FIRE EXTINGUISHERS	GC	GC	GC
		EQUIPMENT (DIVISION 11)			
		ALL KITCHEN EQUIPMENT (UNLESS NOTED)	F	EV	EV
		POS SYSTEMS AND MONITORS	F	M	PB
		FURNISHINGS (DIVISION 12)			
		FURNISHINGS (TABLES, CHAIRS, STOOLS, BANQUET)	F	EV	EV
		OLO & 3RD PARTY CUBBY CABINETS	F	EV	EV
		MENU BOARDS	F	EV	EV
AG-1		BORN ON THE BEACH	F	EV	GC
AG-2		YOU'RE ON TROPIC TIME	F	EV	GC
AG-3		MANGO PHOTO	F	EV	GC
AG-4		AVOCADO PHOTO	F	EV	GC
***		CHEMICAL PROGRAM	F	KC	KC
		SPECIAL CONSTRUCTION (DIVISION 13)			
		SURVEILLANCE SYSTEM	F	VLL	V
		SECURITY SYSTEM	F	VLL	V
***		MUSIC/ENTERTAINMENT	F	MMM	V
		FIRE SPRINKLER	GC	VLL	GC
		FIRE ALARM	GC	VLL	GC
		MECHANICAL (DIVISION 15)			
		PLUMBING ROUGH-IN DWV & H2O DISTRIBUTION	GC	CC	GC
		RESTROOMS TOILETS AND SINKS	GC	SPS	GC
		WATER HEATER	GC	SPS	GC
		WALK-IN COOLER & FREEZER BOX	V	EV	GC
		NEW HVAC (IF APPLICABLE)	GC	CC	GC
		MECH CONNECTIONS/DUCT/DIFFUSERS/CONTROLS	GC	CC	GC
		TEST & BALANCE	GC	CC	GC
		PLUMBING CERTS & WATER TESTS	GC	CC	GC
		ELECTRICAL (DIVISION 16)			
		ELECTRICAL ROUGH-IN WIRING	GC	CC	GC
		ELECTRICAL PANELS	GC	CC	GC
***		LIGHTING FIXTURES AND CONTROLS	GC	HL	GC
		TELECOMMUNICATIONS	F	UC	UC
		POS WIRING AND INSTALLATION	F	M	PB

* PROVIDED BY FRANCHISEE VIA PROJECT COORDINATOR
** LOCATION TO BE DETERMINED BY LOCAL FIRE JURISDICTION AUTHORITY
*** PREFERRED VENDOR

GENERAL NOTES

1. ALL ROUGH-INS AND CONNECTIONS SHOWN ON THESE PLANS ARE FOR FOOD SERVICE FIXTURES AND EQUIPMENT PROVIDED BY THE EQUIPMENT VENDOR OR BY OUTSIDE PARTIES LISTED AS 'VENDOR' OR 'BY OTHERS'. ALL INFORMATION PROVIDED ON THESE PLANS ARE TO BE VERIFIED BY THE GENERAL CONTRACTOR THRU THE SPECIFICATIONS MANUAL PROVIDED BY THE EQUIPMENT VENDOR OR BY CONSULTING THE APPROPRIATE OUTSIDE PARTIES .
2. THE GENERAL CONTRACTOR IS RESPONSIBLE FOR ADJUSTING ACTUAL ROUGH-IN LOCATIONS AS NEEDED BY FIELD CONDITIONS FOR EQUIPMENT UTILITY CONNECTION(S) PER MANUFACTURER'S CURRENT SPECIFICATION SHEETS.
3. SERVICE ROUGH-INS AND EQUIPMENT CONNECTIONS MUST BE MADE BY APPROPRIATE TRADES.
4. ALL BUILDING PENETRATIONS REQUIRED FOR FOOD SERVICE EQUIPMENT INSTALLATION SHALL BE PROVIDED BY THE GENERAL CONTRACTOR AND SEALED IN ACCORDANCE WITH LOCAL CODE REQUIREMENTS.
5. ALL WALL SUPPORT (BLOCKING) FOR WALL HUNG EQUIPMENT SHALL BE PROVIDED BY GENERAL CONTRACTOR PER PLAN.
6. GENERAL CONTRACTOR IS RESPONSIBLE FOR ENSURING PROPER WORKING CONDITION AND MEETING CURRENT LOCAL CODE REQUIREMENTS FOR ANY / ALL EQUIPMENT LISTED ON THESE PLANS AS 'EXISTING'.
7. GENERAL CONTRACTOR SHALL FIELD VERIFY ALL DIMENSIONS AND WALL LOCATIONS. ALL DIMENSIONS ARE TO FINISHED WALL AND/OR CENTER LINES OF COLUMNS.
8. ANY DIMENSIONS LABELED "HOLD" OR "CRITICAL" MUST MAINTAIN THAT FINISHED DIMENSION. ALL CORNERS TO BE 90° OR AS SPECIFIED. ANY DISCREPANCIES WITH SPECIFIED DIMENSIONS REQUIRING TRIM OR EQUIPMENT MODIFICATION IS TO BE FURNISHED AND INSTALLED BY THE GENERAL CONTRACTOR AT THEIR EXPENSE.
9. GENERAL CONTRACTOR / OWNER SHALL BE RESPONSIBLE FOR INSURING THAT ALL ADDENDA AND CHANGES TO BUILDING PLANS WHICH ARE MADE PRIOR TO AND DURING CONSTRUCTION ARE PROVIDED TO TROPICAL SMOOTHIE CAFE.
10. NOT USED.
11. THE LATEST DATED REVISION SUPERSEDES AND VOIDS ALL PREVIOUS DRAWINGS. THE GENERAL CONTRACTOR IS RESPONSIBLE FOR COLLECTING ALL OLD COPIES OF THE PLAN SET & DISTRIBUTING CURRENT COPIES TO ALL SUBCONTRACTORS.
12. REFER TO THE EQUIPMENT VENDOR WITH ANY CONCERNS OR QUESTIONS REGARDING DELIVERY AND STORAGE OF EQUIPMENT.
13. FOLLOWING FINAL FIXTURES INSTALLATION THE GENERAL CONTRACTOR SHALL CLEAN-UP AND DISPOSE OF ALL TRASH, CARTONS, CREATES, DEBRIS, ETC.
14. GENERAL CONTRACTOR TO REPLACE ALL HVAC FILTERS ONCE CONSTRUCTION IS COMPLETE
15. GC MUST LOCATE THE EXISTING MAIN SEWER WASTE LINE PRIOR TO ISSUANCE OF PERMIT. GC TO INCLUDE CAMERA / X-RAY OF SLAB FOR LOCATION OF WASTE LINE WITHIN BID. GC MUST PROVIDE SKETCH TO PLUMBING ENGINEER PRIOR TO PERMIT ISSUANCE. IF RECEIVED AFTER PERMIT ISSUANCE ANY COST TO REVISE PLANS WILL BE BILLED TO THE GENERAL CONTRACTOR.

ABBREVIATION KEY

ABBR.	ABBREVIATION DESCRIPTION
F	FRANCHISEE
EV	EQUIPMENT VENDOR
GC	GENERAL CONTRACTOR
EC	ELECTRICAL CONTRACTOR
CC	CONTRACTOR'S CHOICE
OC	OWNER'S CHOICE
LJ	LOCAL JURISDICTION
SC	SIGN COMPANY
VLL	VERIFY WITH LANDLORD
V	VENDOR
M	MICROS
PB	PAR BRINK
UMI	ULTERIOR MOTIVES INTERNATIONAL
HL	HERMITAGE LIGHTING
MMM	MUZAK (MOOD MEDIA)
UC	UTILITY COMPANY
INSTALL	EQUIPMENT INSTALLER
FIN. CON.	FINAL CONNECTIONS
KC	KAY CHEMICALS

LIFE SAFETY GENERAL NOTES:

A. AS REQUIRED BY LOCAL FIRE MARSHALL, PLANS SHALL COMPLY WITH ALL REQUIREMENTS OF THE FIRE PREVENTION CODE (INCLUDING AMENDMENTS & NFPA DOCUMENTS)
B. MODIFICATIONS TO FIRE SPRINKLER SYSTEM BY TENANT (IF REQUIRED).
C. FIRE ALARM SYSTEM BY TENANT (IF REQUIRED).
D. PROVIDE AND INSTALL KNOX BOX FOR FIRE DEPARTMENT. ACCESS - CONFIRM W/ LOCAL FIRE AUTHORITY LOCATION, QUANTITY, AND MODEL NUMBER TO BE ORDERED AND INSTALLED.
E. PROVIDE FIRE EXTINGUISHERS IN SPACES LOCATED PER THE REQUIREMENTS OF NFPA 10, 2010 EDITION. SIZE SHALL BE A MIN. OF 2A 10 BC AND SHALL BE INSTALLED AT A MIN. 48" ABOVE FINISH FLOOR TO THE TOP OF HANDLE. COORDINATE TYPE, QUANTITY, AND LOCATIONS W/ LOCAL GOVERNING AUTHORITY.

CONSTRUCTION NOTES

ARCHITECT'S DESIGN WITHOUT CONSTRUCTION PHASE SERVICES

SINCE DIRECT CONSTRUCTION OBSERVATIONS AND REVIEW OF THE CONTRACTOR'S PERFORMANCE IS NOT INCLUDED AS PART OF THE ARCHITECT'S BASIC SERVICES, IT IS UNDERSTOOD THAT SUCH RESPONSIBILITIES WILL BE ASSUMED BY OTHERS. MCG AVAILS ITSELF TO THE CLIENT, THE CONTRACTOR, AND ANY OTHER PARTIES AS NECESSARY (VIA TELEPHONE, FAX, AND EMAIL) IN ORDER TO ASSIST IN PROVIDING CLARIFICATIONS OR RESOLVING ISSUES AND PROBLEMS THAT MAY ARISE. ALTHOUGH MANY ISSUES CAN BE EASILY ADDRESSED WITHOUT THE ARCHITECTS INVOLVEMENT, THERE ARE TIMES WHEN PARTICIPATION IS ADVISABLE. DETERMINATION OF WHEN INVOLVEMENT IS APPROPRIATE IS LEFT TO THE PROFESSIONAL DISCRETION OF THE CONTRACTOR. IT IS UNDERSTOOD THAT THE CLIENT AND/OR THE CONTRACTOR ASSUMES ALL RESPONSIBILITY FOR INTERPRETATION OF THE DRAWINGS, AND ANY OTHER SUPPLEMENTAL INFORMATION, AND WHEN THE ARCHITECT IS DENIED THE OPPORTUNITY TO PROVIDE CLARIFICATIONS OR PARTICIPATE IN CHANGES TO THE DESIGN OR THE RESOLUTION OF ISSUES OR PROBLEMS, ALL PARTIES WAIVE ANY CLAIMS AGAINST THE ARCHITECT THAT MAY BE IN ANY WAY CONNECTED THERETO MCG IS HELD HARMLESS FROM LOSS, CLAIM, OR COSTS ARISING OR RESULTING FROM MODIFICATIONS OR CHANGES MADE TO THE DESIGN (WITHOUT THE KNOWLEDGE OF THE ARCHITECT) DUE TO CONDITIONS OR CIRCUMSTANCES (ANTICIPATED OR NOT) BEYOND THE ARCHITECT'S CONTROL.

MECHANICAL, PLUMBING AND ELECTRICAL NOTES

1. THE RELATIONSHIP BETWEEN FLOOR SINKS AND NEW WALLS IS CRITICAL TO THE FINAL FIXTURE / EQUIPMENT LAYOUT. FLOOR SINKS AS SHOWN ON THE PLUMBING PLANS ARE DIMENSIONALLY LOCATED OFF OF NEW PARTITIONS, AND THEREFORE THE CONTRACTOR MUST COMPLETE PLAN LAYOUT ON SLAB PRIOR TO FINAL LOCATION OF FLOOR SINKS FOR ACCURATE FINAL PLACEMENT.

G.C. COMPLIANCE:
OWNER'S GENERAL CONTRACTOR SHALL VISIT THE PREMISES AND VERIFY ALL EXISTING CONDITIONS PRIOR TO START OF CONSTRUCTION AND SHALL REPORT ALL DISCREPANCIES TO TENANT'S ARCHITECT. TENANT'S GENERAL CONTRACTOR SHALL CONFORM TO ALL REQUIREMENTS REGARDING CONSTRUCTION PROCEDURES, INSURANCE, ETC., AS SEAT FORTH BY THE LANDLORD.

G.C. COMPLIANCE:
OWNER'S SIGNAGE CONTRACTOR SHALL PREPARE SIGNAGE SHOP DRAWINGS AND SUBMIT TO BUILDING DEPT. & LANDLORD FOR APPROVAL. ALL SIGNAGE IS UNDER SEPARATE PERMIT.

TRAVEL DISTANCE

FE — FIRE EXTINGUISHER SHOWN FOR REFERENCE ONLY
- REFER TO GENERAL NOTE F.
COORDINATE TYPE, QUANTITY, & LOCATION W/ LOCAL FIRE MARSHAL

LIFE SAFETY LEGEND — SCALE N.T.S. — 02

KITCHEN
450 S.F. (200 S.F./OCC.) = 3 OCCUPANTS

DINING
285 S.F. (150 S.F./OCC) = 3 OCCUPANTS

RESTROOMS AND COORIDOR
145 S.F. = 0 OCCUPANTS

UNOCCUPIED SPACE
(WALLS, PERMANENT EQUIPMENT, ETC.) 570 SQ. FT.

TOTAL 1,450 S.F. S.F. = 6 OCCUPANTS
12 UNFIXED SEATS

NOTE:
100'-0" MAXIMUM COMMON PATH OF EGRESS TRAVEL DISTANCE (FEET), WITH SPRINKLER SYSTEM

N

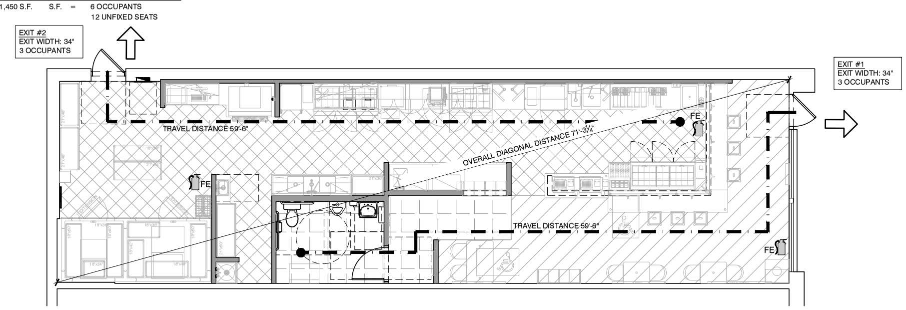

LIFE SAFETY PLAN — SCALE 3/16" = 1'-0" — 01

mcgarchitecture.com
CLEVELAND
DENVER
GLENDORA
IRVINE
ORLANDO
PHOENIX
SAN FRANCISCO

Seal: MISSOURI CERTIFICATE OF AURTHORITY #A-2014005840

A Project for:

tropical SMOOTHIE CAFE
eat better. feel better.

727 N. New Ballas Road
Creve Coeur, MO 63141
TSC MO-051

Revisions:	
Issued for Bid-Permit	07-22-2024

No. Description	Date
Project No.:	24181.10
Drawn By:	KPK
Reviewed By:	TRG
Scale:	AS NOTED
Date:	
Filename:	AS NOTED

Sheet Title:
LIFE SAFETY
& RESPONSIBILITY

Sheet #:
A001

©MCG ARCHITECTURE 2024 ALL RIGHTS RESERVED

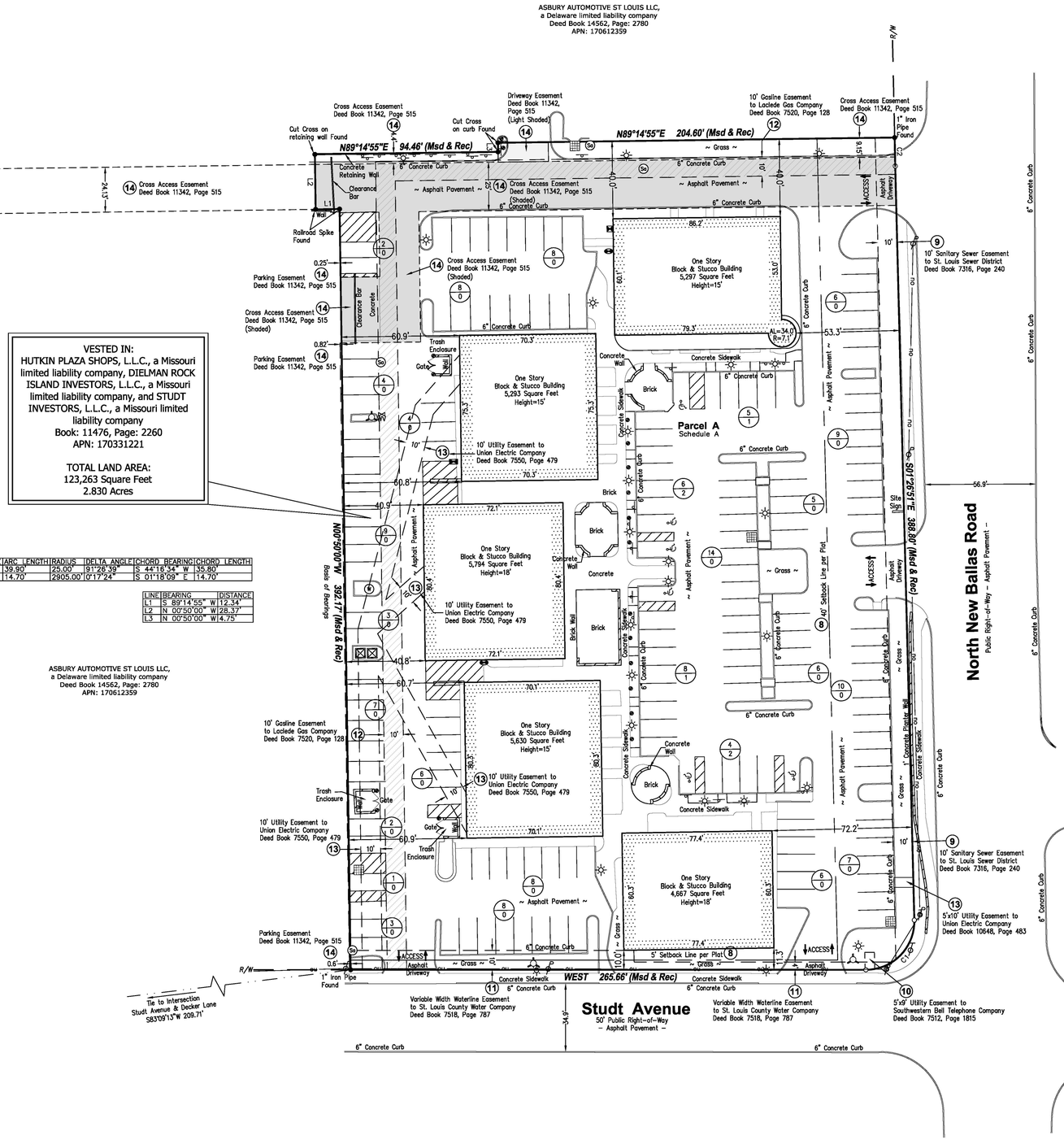

CURVE	ARC LENGTH	RADIUS	DELTA ANGLE	CHORD BEARING	CHORD LENGTH
C1	39.90'	25.00'	91°26'39"	S 44°18'34" W	35.80'
C2	14.70'	2905.00'	0°17'24"	S 01°18'09" E	14.70'

LINE	BEARING	DISTANCE
L1	S 89°14'55" W	12.34'
L2	N 00°50'00" W	28.37'
L3	N 00°50'00" W	4.75'

FIRST AMERICAN TITLE INSURANCE COMPANY COMMITMENT NO. 1002-204813-RTT - SCHEDULE A: EXHIBIT A:

PARCEL A:

A TRACT OF LAND BEING LOT "A" OF THE "BOUNDARY ADJUSTMENT PLAT OF A TRACT OF LAND BEING PART OF LOTS 3 AND 4 OF "STUDT'S HOME PLACE" AND PART OF LOT 7 OF " THE LAKE HOUSE FARM SUBDIVISION" AND PART OF VACATED DECKER LANE", ACCORDING TO THE PLAT THEREOF RECORDED IN A PLAT BOOK 345, PAGE 557 OF THE ST. LOUIS COUNTY, MISSOURI, RECORDS.

PARCEL B:

NON-EXCLUSIVE EASEMENT FOR INGRESS AND EGRESS AND PARKING VEHICLES, AS CREATED BY THE EASEMENT AGREEMENT BY AND BETWEEN SIEBEN, INC., A MISSOURI CORPORATION AND CAPLACO ELEVEN, INC., A MISSOURI CORPORATION DATED AS OF OCTOBER 29, 1997 AND RECORDED NOVEMBER 3, 1997 IN BOOK 11342, PAGE 515.

FIRST AMERICAN TITLE INSURANCE COMPANY COMMITMENT NO. 1002-204813-RTT - SCHEDULE B, SECTION II:

Numbers correspond with survey-related Schedule B exception items contained in the above referenced Title Commitment.

8. Building lines, easements, covenants and restrictions established by the plat recorded in Plat Book 345, Page 557 and Affidavit recorded in Book 11372, Page 2009 and Consent recorded in Book 11389, Page 1521. (Parcel A)
   (AFFECTS THE SUBJECT PROPERTY – PLOTTED AND SHOWN HEREON)
9. Easement granted to the Metropolitan St. Louis Sewer District by the instrument recorded in Book 7316, Page 240. (Parcel A)
   (AFFECTS THE SUBJECT PROPERTY – PLOTTED AND SHOWN HEREON)
10. Easement granted to the Southwestern Bell Telephone Company by the instrument recorded in Book 7512, Page 1815.
    (AFFECTS THE SUBJECT PROPERTY – PLOTTED AND SHOWN HEREON)
11. Easement granted to St. Louis County Water Company by the instrument recorded in Book 7518, Page 787. (Parcel A)
    (AFFECTS THE SUBJECT PROPERTY – PLOTTED AND SHOWN HEREON)
12. Easement granted to Laclede Gas Company by the instrument recorded in Book 7520, Page 128. (Parcel A)
    (AFFECTS THE SUBJECT PROPERTY – PLOTTED AND SHOWN HEREON)
13. Easement granted to Union Electric Company by the instrument recorded in Book 7550, Page 479 and Book 10648, Page 483. (Parcel A)
    (AFFECTS THE SUBJECT PROPERTY – PLOTTED AND SHOWN HEREON)
14. Terms and provisions of Easement Agreement by and between Siebin, Inc. and Caplaco Eleven, Inc. dated as of October 29, 1997 and recorded November 3, 1997 in Book 11342, Page 515. (Parcel A)
    (MULTIPLE EASEMENTS BOTH AFFECT AND BENEFIT THE SUBJECT PROPERTY – PLOTTED AND SHOWN HEREON)
15. Terms and provisions of Memorandum of Agreement pursuant to a Tenants in Common Agreement dated as of February 27, 1998, entered into by and among Hutkin Plaza Shops, L.L.C., Dielman Rock Island Investors, L.L.C., and Studt Investors, L.L.C., according to an instrument recorded in Book 11476, Page 2288.
    (AFFECTS THE SUBJECT PROPERTY – CONTAINS NO PLOTTABLE ITEMS)
16. Terms and provisions of Parking Declaration dated March 26, 1999 by Hutkin Plaza Shops, L.L.C., a Missouri limited liability company, Studt Investors, L.L.C., a Missouri limited liability, and Dielman Rock Island Investors, L.L.C., a Missouri limited liability company according to the instrument recorded in Book 12048, Page 1223.
    (AFFECTS THE SUBJECT PROPERTY – CONTAINS NO PLOTTABLE ITEMS)

ZONING:

As of December 28, 2016, we have not yet received the current zoning information for the subject property.

ENCROACHMENTS:

At the time of this survey, there was no visible evidence of encroachments or violations.

FLOOD ZONE:

By scaled map location and graphic plotting only, the subject property appears to lie entirely in Zone X-Unshaded (Areas determined to be outside the 0.2% annual chance floodplain) according to the Flood Insurance Rate Map for the County of St. Louis, Community Panel No. 29189C0187K, Revised Date February 4, 2015.

BASIS OF BEARING:

The basis for all bearings shown hereon is the West property line of subject property, known as being N00°50'00"W, per Plat Book 345, Page 557 of the Saint Louis County Records.

MISCELLANEOUS NOTES:

1. There is direct access to the subject property via North New Ballas Road and Studt Avenue, both public right-of-ways. There is also access to the subject property per a Cross Access Easement set forth in Deed Book 11342, Page 515 from Decker Lane, a public right-of-way.
2. With regard to Table A Item 11, an 811 utility locate request was made and markings found at the site, if any, have been noted. All underground utilities may not be shown and markings found at the site may not depict underground features accurately. Locking excavation, the exact location of underground features cannot be accurately, completely, and reliably depicted. In some jurisdictions, 811 or other similar utility locate requests from surveyors may be ignored or result in an incomplete response.
3. The posted address on site is 701 North New Ballas Road, Creve Coeur, Missouri.
4. At the time of this survey, there was no observable surface evidence of earth moving work, building construction or building additions within recent months.
5. At the time of this survey, there was no observable evidence of the subject property being used as a solid waste dump, sump or sanitary landfill.
6. At the time of this survey, there was no observable evidence of any recent changes in street right-of-way lines either completed or proposed, and available from the controlling jurisdiction.
7. At the time of this survey, there was no observable evidence of any recent street or sidewalk construction or repairs.
8. The Property surveyed and shown hereon is the same property described in Schedule A of First American Title Insurance Company Title Commitment No. 1002-204813-RTT with an effective date of November 28, 2016 FIRST REVISION/FIRST AMENDMENT.
9. Professional Liability Insurance Policy obtained by the Surveyor in the minimum amount of $3,000,000 to be in effect throughout the contract term. Certificate of insurance to be furnished upon request.

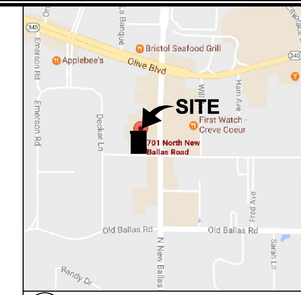

VICINITY MAP
NOT TO SCALE

SYMBOL LEGEND

- R/W – Right-of-Way
- P/L – Adjoiner Property Line
- ℄ – Centerline
- ● – Monumentation Found as Noted
- ○ – 5/8" Iron Pin w/Cap Set
- XX – No. of Regular Parking Spaces
- XX – No. of Handicap Parking Spaces
- MH – Manhole
- Curb Inlet Basin w/ Grate
- Catch Basin
- Fire Hydrant
- Gas Meter
- Electric Meter
- Electric Transformer
- Sign
- Mail Box
- Traffic Pole
- Light Pole
- Utility Pole
- X – Fence (As Noted)
- w – Water Line
- g – Underground Gas Pipeline
- e – Underground Electric
- t – Underground Telephone
- ou – Overhead Utilities
- No Parking Area
- Building Area
- Shaded Easement Area
- Light Shaded Easement Area

TOTAL LAND AREA:

123,263 Square Feet
2.830 Acres

PARKING:

159 Parking Spaces
6 Handicapped Spaces
165 Total Parking Spaces

CERTIFICATION:

To: Cantor Real Estate Investment Management Investments, LLC; CF Net Lease Portfolio II DST; Cantor Commercial Real Estate Lending, L.P.; Citigroup Global Markets Realty Corp.; First American Title Insurance Company; Stewart Title Guaranty Company, Wick Phillips Gould & Martin, LLP; CH Retail Acquisition, L.L.C.; DLA Piper LLP (US); and each of their respective successors, assigns, affiliates, trustees, managers, and direct and indirect beneficial interest holders:

This is to certify that this map or plat and the survey on which it is based were made in accordance with the 2016 Minimum Standard Detail Requirements for ALTA/NSPS Land Title Surveys, jointly established and adopted by ALTA and NSPS, and includes Items 1, 2, 3, 4, 6(a), 7(a), 7(b)(1), 7(c), 8, 9, 11, 13, 14, 16, 17, and 20 of Table A thereof. The field work was completed on December 23, 2016.

Date of Plat or Map: December 28, 2016.

I further certify that this survey was executed in accordance with the current Missouri Minimum Standards for Property Boundary Surveys.

By: S. Craig Davis
S. Craig Davis, PLS
Missouri Land Surveyor No. 2357
For and on behalf of Millman Surveying, Inc.

REVISION HISTORY

BY:	DATE:	COMMENT:
MAP	3/1/17	EASEMENT VERIFICATION

millman
National Land Services
Transforming the Industry
Surveying
Zoning
Environmental
Real Support - Title Review
Millman Surveying, Inc.
Corporate Headquarters
4111 Bradley Circle NW
Canton, OH 44718
Phone: 800-520-1010
Fax: 330-342-0834
www.millmanland.com
landsurveyors@millmanland.com

ALTA/NSPS LAND TITLE SURVEY PREPARED FOR:

CROW HOLDINGS CAPITAL REAL ESTATE
3819 Maple Avenue
Dallas, Texas 75219

Plaza Shops
701 North New Ballas Road
City of Creve Coeur
County of Saint Loius
State of Missouri

NORTH
GRAPHIC SCALE
0 30 60
1 INCH = 30 FT.

STATE OF MISSOURI
LS-2357
S. CRAIG DAVIS
REGISTERED LAND SURVEYOR
Surveyor's Seal

Sheet No. 1 of 1

MSI Project No. 39532
PC: EF
PM: MG
Drafter: IMG

EXHIBIT A

OUTLINE OF PREMISES

This Exhibit is attached to this Lease solely for the purpose of locating the Premises within the Shopping Center and depicting the general layout of the Shopping Center and shall not be deemed to be a representation, warranty or agreement by Landlord as to any information shown hereon or that the Shopping Center or stores be exactly as indicated hereon.

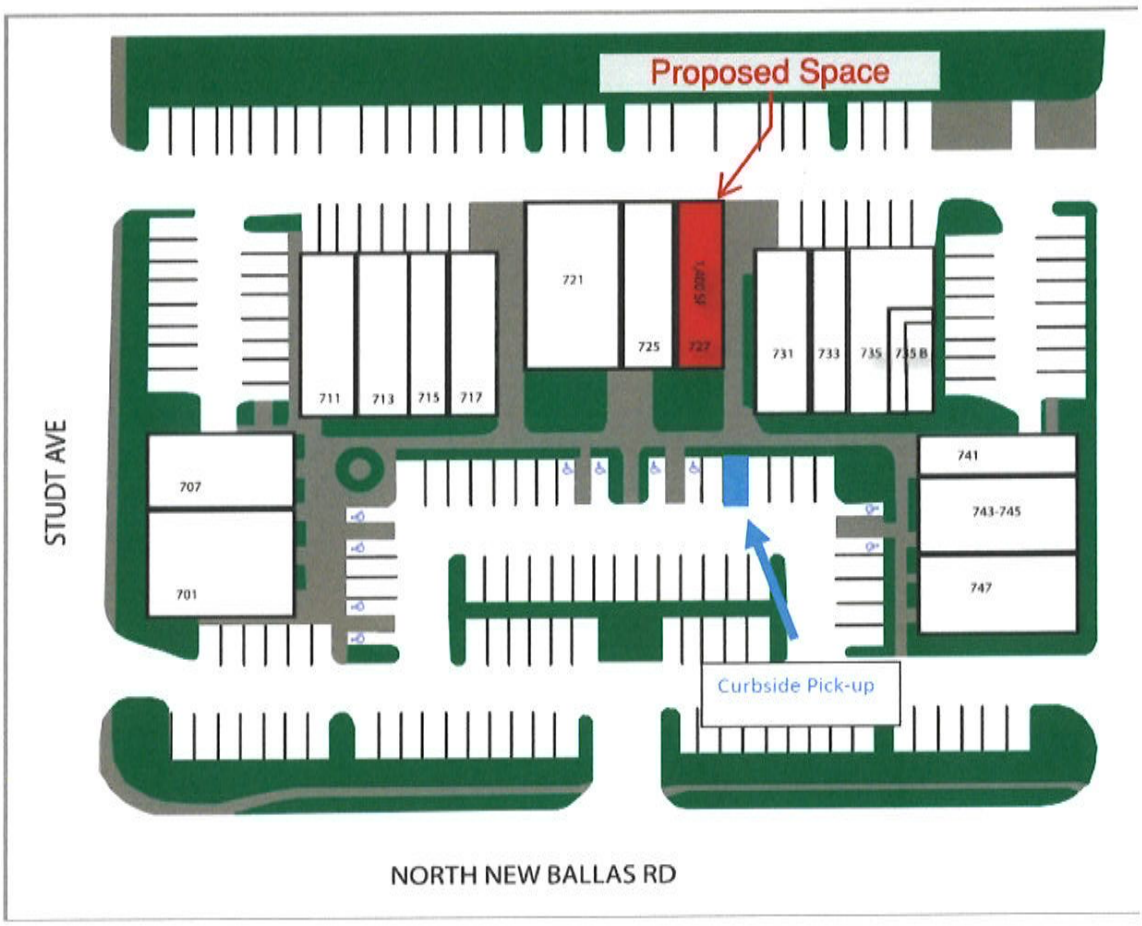

city of CREVE COEUR

300 North New Ballas Road • Creve Coeur, Missouri 63141

(314) 432-6000 • Fax (314) 872-2539

APPLICATION TO PLANNING AND ZONING COMMISSION

#24-039: A CONDITIONAL USE PERMIT FOR A DRIVE-THROUGH FACILITY FOR A COMPREHENSIVE MARIJUANA DISPENSARY, KEY CANNABIS, LOCATED AT 105 NORTH LINDBERGH BOULEVARD

FOR THE MEETING OF: Tuesday, January 21, 2025, 6:00 PM

LOCATION: 105 North Lindbergh Boulevard, zoned "GC" General Commercial District

REQUEST: Chad Hanson, of Premier Architecture Design and Build, has submitted an application on behalf of Key Cannabis Dispensary, a marijuana dispensary, located at 105 North Lindbergh Boulevard within the "GC" General Commercial zoning district, for a Conditional Use Permit to use the existing drive through at this location. NAICS CC453999 Comprehensive or Medical Marijuana Dispensary Facility provides any drive-through or drive-up portion of any such dispensary shall be a Conditional Use which requires review and final approval by the City Council upon the recommendation of the Planning and Zoning Commission.

Key Issues:
- Does the request further the goals and/or implement the Comprehensive Plan?
- Is the request consistent with the required findings for a conditional use permit?

Creve Coeur 2030 Plan References
- Mixed-Use District
- Design Guidelines

Zoning Code References
- Section 405.360: GC-General Commercial District
- Section 405.470: Conditional Use Permit

APPLICANTS: Chad Hanson
Premier Architecture Design and Build
347 S. Williams Street
Murphysboro, IL 62966

PROPERTY OWNER: Rainbow Justice MO LLC
500 Park Ave, 10th Floor
New York, NY 10022

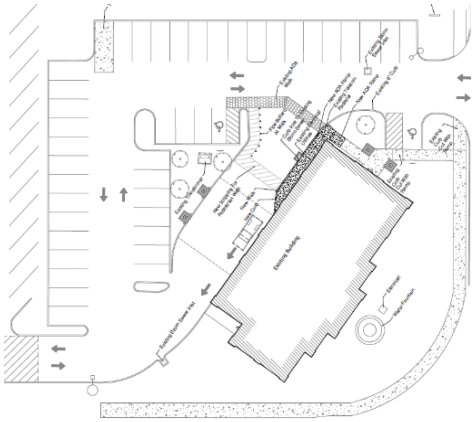

REPORT PREPARED BY: Jason Jaggi, Director of Community Development

DATE: January 17, 2025

ATTACHMENTS: Applicant's Materials received January 13, 2025
Draft Ordinance

PROPOSAL

Chad Hansen, with Premier Architecture Design and Build, on behalf of Key Cannabis Dispensary, has submitted a conditional use permit application to operate a drive through facility as part of the existing marijuana dispensary located at 105 North Lindbergh Boulevard. The former Homestate Dispensary has been sold and renamed to Key Cannabis Dispensary. The existing building was originally constructed in 2004 as a bank with a drive-through component located to the rear of the building with three drive through lanes. The ground floor of this building has been used as a marijuana dispensary since 2021. The drive through windows have been removed along with other supporting elements such as kiosks. The overhead canopy and drive lanes of the former drive through component remain.

The applicant intends to restore the former drive through facility to offer marijuana products that are sold in the store. According to the application submitted, the planned drive through will be utilized as a pickup window only. All orders will be placed through the company's website prior to arrival. There will be no menu board or order on arrival. The processing of the online orders and coordination of the pickup at the drive through window will be accomplished by one to two employees. The operation of the drive through facility will be the same as the indoor operations, 8:00am to 9:45pm, 7 days as week.

The exterior changes to the site and building are relatively minor. The proposed changes involve reutilizing the existing drive through canopy and restoring one of the prior three drive through lanes. The stacking lane configuration shown on the site plan for the single drive through lane provides a capacity for 3-5 vehicles. The entrance to the drive though facility will be from Ladue Road only. A small drive through service window will be installed underneath the overhead canopy and a new rear entrance to the dispensary will be added with a new walkway placed along the rear of the building. A small entrance canopy with a blue metal roof cover will be added to accentuate the new entrance at the rear of the building.

The applicant has submitted their proposed building signage as part of this request. Signage is subject to a separate review at the staff level; however, the proposed signage provides the Commission with a full view of how all of the elements fit together. The primary sign on the front of the building will be replaced with the new business name, Key Cannabis Dispensary. A new sign is also proposed at the rear entrance.

LAND USE AND ZONING OF SURROUNDING PROPERTIES

The adjacent zoning and land uses are as follows:

DIRECTION	USE	ZONED	SEPARATED BY
North	Office Building	GC General Commercial	N/A
South	Gas Station	GC General Commercial	Ladue Rd
East	Residential	City of Ladue	N. Lindbergh Blvd
West	Residential	B Single Family Residential	N/A

COMPREHENSIVE PLAN REVIEW
The subject property is located within the Lindbergh Corridor as identified in the City's comprehensive plan, *Creve Coeur 2030*. The Lindbergh Corridor is part of the Mixed-Use District (MU) place type. The MU place-type supports the development of a wide variety of medium-density uses including commercial, retail, office, institutional, dining, community services and multi-family residential within a suburban context. The land uses are supported primarily through vehicular means with the goal for improved walkability, pedestrian connections to adjacent neighborhoods, and landscaped streetscapes (p 102).

The proposal seeks to utilize the former drive through component when this property contained a bank. As a result, this drive through proposal does not represent a significant change in the historical use of the property. However, this property has been viewed as an eastern gateway to Creve Coeur and was carefully planned to support this goal through building orientation, elaborate landscaping and placement of the drive-through in a less visible location behind the building. This proposal does not change these attributes; however, staff has included a condition that the enhanced site features, including the extensive landscaping, city signage, planters and the water feature be maintained and any missing landscaping is replaced. The elements of the site contribute to the goals of Lindbergh corridor MU place-type, particularly beautifully landscaped streetscapes.

DESIGN GUIDELINES
Given the scope of this request, the review of the Design Guidelines is limited. The Design Guidelines recommend that service areas should be positioned to minimize view and visual impact (p 10). Further architectural consistency of the colors, materials and detailing are to be provided between all elevations (p 9).

This proposal utilizes the former drive through component which is located to the rear of the building in agreement with the guidelines. The proposed rear entrance canopy is proposed to be painted in a blue color to match the corporate color scheme of the business, including the proposed wall sign that would be located next to the canopy at this rear entrance. The Commission should review the request by the applicant to keep the blue accent color on the rear of the building to determine if it represents a significant departure from the Design Guidelines recommendations. If required to be green to match the building, a condition of approval should be added.

ZONING REVIEW
Recreational marijuana uses were incorporated into the City's zoning code in February 2023 in accordance with state law (City Ordinance No 5828). At that time, allowing drive through facilities for marijuana dispensaries was discussed and the determination was made to require such proposals to obtain a conditional use permit. As such, Table A, Permitted and Conditional Uses allows marijuana dispensaries as a permitted use (subject to certain locational

requirements) with a drive through or drive-up portion requiring a conditional use review (NAICS Code: CC453999).

The conditional use review for drive through facilities, including permitted marijuana dispensaries, requires consideration of the following requirements as provided in Section 405.470.A.8. The criteria are provided below with staff's analysis:

a. *Shall provide space for at least three (3) cars per drive-up window or station.*
   Criterion met. The site plan provides a stacking lane accommodating a minimum of three cars.
b. *Shall provide landscaping to screen the view of drive-up waiting spaces from surrounding properties.*
   Criterion met. The proposal involves reutilizing the former drive through located behind the building which is largely screened by the building and existing landscaping.
c. *Drive-up window access, waiting spaces and egress shall not interfere with site circulation or be hazardous to motorists entering, exiting or passing by the site.*
   Criterion met. The proposal involves reutilizing the former drive through located behind the building. The drive through has dedicated service lanes that are separated from the circulation elsewhere on the site. A clearly defined pedestrian crossing is placed with proposed additional signage to increase the safety of the motorists utilizing the drive through and the pedestrians entering the building from the parking lot.
d. *When provided in the "PH" District, drive-through services shall be limited to uses complementary to the medical uses existing on the campus.*
   Criterion not applicable. This property is not located within the PH District.

In addition to the above specific requirements for drive through facilities, the general review criteria for all conditional uses as found in Section 405.1070.E. are provided below for the Commission's consideration:

Standards. The burden of persuasion shall rest with the applicant to clearly establish to the satisfaction of the City Council that the proposed conditional use will meet the following criteria. The City Council shall not approve a conditional use unless it finds that the application and information presented clearly indicate that the proposed conditional use:

1. Complies with all applicable provisions of this Zoning Ordinance Chapter 405 including but not limited to environmental performance standards presented in Section 405.550, the criteria in Section 405.470 and the standards of this Chapter in regard to yard and setback, parking and loading areas, screening and buffering, refuse, storage and service areas and signs.

2. Will contribute to and promote the welfare and convenience of the community at the specific location.

3. Will not cause substantial injury to the value of neighboring property.

4. Is consistent with the applicable provisions of the City's Comprehensive Plan and any applicable neighborhood or sector plans, unless good cause is demonstrated for deviation there from.

5. Will provide, if applicable, erosion control and on-site stormwater detention in accordance with the standards contained in this Chapter.

6. Will be compatible with the character of the surrounding area and thus will not impose an excessive burden or have a substantial negative impact on surrounding or adjacent users or on pedestrian or vehicular traffic or on community facilities or services, including but not limited to emergency services.

In consideration of the above standards, the proposed addition of a drive through to an existing dispensary requires additional review due to the potential to create negative impacts to the surrounding area. In this case, the drive through will be small in scale and will utilize the existing canopy and drive through facilities when this building was used as a bank. Further, the application states that this drive through will be used only as a pick-up window as the orders will be placed ahead of time. Signage is proposed to reduce conflicts between motorists utilizing the drive through and pedestrians. These aspects suggest that the drive through has been designed to be low volume. The Commission should confirm these conditions with the applicant as part of their deliberations on this request.

Landscaping
As mentioned previously in this report, the site plan was approved with the use of extensive landscaping and outstanding site features including decorative brick accent walls, city "gateway" signage, fountain, and concrete planters with seasonal plantings. Staff has included a condition of approval that these site components be maintained in accordance with the original site plan on file and any deficiencies are addressed prior to final occupancy approval for the drive through component.

Other Review Items
No changes to the site are proposed including lighting, the trash enclosure or parking. These items appear to be in satisfactory condition. Staff has discussed with the applicant the need to repair, reseal and restripe the asphalt parking lot. Staff has issued a condition of approval that this property maintenance item be addressed as part of the conditional use permit for the drive through facility.

SUMMARY AND CONCLUSION
Based on the above analysis, the proposal appears to not be in conflict with the recommendations of the Comprehensive Plan and the Design Guidelines and that it meets the minimum requirements of the Zoning Ordinance, including the Conditional Use requirements with the exception of a few minor elements as discussed in this report. These include the request for the blue canopy as opposed to using a green color to match the rest of the building, the need to maintain the original site and landscaping plan and bring the site up to these requirements with respect to the landscaping; and, the need to address the maintenance of the parking lot. With these considerations in mind, Staff recommends the following conditions of approval:

1. The Conditional Use Permit shall be for the operation of a drive through component associated with a marijuana dispensary at 105 N. Lindbergh Boulevard, with drive-thru facilities as shown in

the "Site Development Plan" submitted on January 13, 2025 as bound together and submitted in conjunction with Application #25-039 by Premier Architecture, except as modified below.

2. Hours of operation for the drive through component shall be the same as for the walk-in retail component, which is 8:00 a.m. to 10:00 p.m., seven days a week. Additional business hours may be permitted with the Zoning Administrator's approval.
3. No external speakers or menu boards shall be permitted.
4. The operator of the dispensary with a drive through shall maintain the existing landscaping and related site features including operation of the fountain, city gateway signage, decorative landscape walls and enhanced plantings as previously approved with the site development plan on file in the offices of the Department of Community Development. Any missing landscaping shall be replaced in accordance with the site development plan prior to receiving final occupancy of the drive through.
5. The parking lot, including drive aisles, shall be repaired, as necessary, and resealed and striped prior to receiving final occupancy of the drive through component.
6. All lighting shall be in compliance with Section 405.680, Lighting, of the Zoning Ordinance.
7. All signs and banners shall be in conformance with Article VIII, Sign Regulations, of the Zoning Code and require permit approval.
8. Any future enlargement, extension, expansion, or alteration in the use of the structures or site must be approved by the City Council upon receipt of the recommendation of the Planning and Zoning Commission as an amendment to the Conditional Use Permit before a Building Permit for the enlargement, expansion or alteration may be issued.
9. Failure to comply with any one or all of the conditions of this permit shall be adequate cause for the revocation of said permit by the City Council, provided, however, no permit shall be revoked without prior notice to the owner of the intention of the City Council to revoke this permit and reasonable time granted to the owner to correct or remedy any such breach of conditions, except for repeated breaches or violations.
10. No conditional use permit granted by the City Council shall be valid for a period longer than one year from the date it grants the conditional use permit, unless within such period: (1) a building permit is obtained and construction is begun; or (2) if a building permit is not required, an occupancy permit is obtained, and the use of the building commenced. The City Council may grant extensions to the one (1) year period of not more than one hundred and eighty (180) days each, without notice or hearing, provided that a written request for such extension is filed by the original applicant and approved by the City Council prior to the date the conditional use permit is scheduled to expire.
11. Any transfer of ownership or lease of the property shall include in the transfer or lease agreement a provision that the purchaser or lessee agrees to the conditions herein set forth, and written confirmation thereof signed by the new owner or lessee shall be filed with the City at the time of such transfer or lease. Failure to comply with this provision shall not excuse anyone from these conditions.

ACTION

If the Commission determines the proposal is not in conflict with the recommendations of the Comprehensive Plan and the Design Guidelines and that it meets the minimum requirements of the Zoning Ordinance, including the Conditional Use requirements, it may vote on a recommendation to the City Council. Any changes to the draft ordinance should be discussed and made by separate actions.

MOTION

The following is an example of an appropriate motion for this application:

> "I move to recommend approval of Application #24-039 for a Conditional Use Permit for a drive through facility associated with a marijuana dispensary located at 105 North Lindbergh Blvd. subject to the conditions contained in the draft ordinance attached to the staff report dated January 17, 2025" (conditions may be added, eliminated, or modified by preceding motion).

APPENDIX 1: COMPREHENSIVE PLAN AND DESIGN GUIDELINES
Included and attached by reference. See body of report for specific excerpts.

APPENDIX 2: ZONING CODE
Included and attached by reference. See body of report for specific excerpts.

APPENDIX 3: AERIAL PHOTO

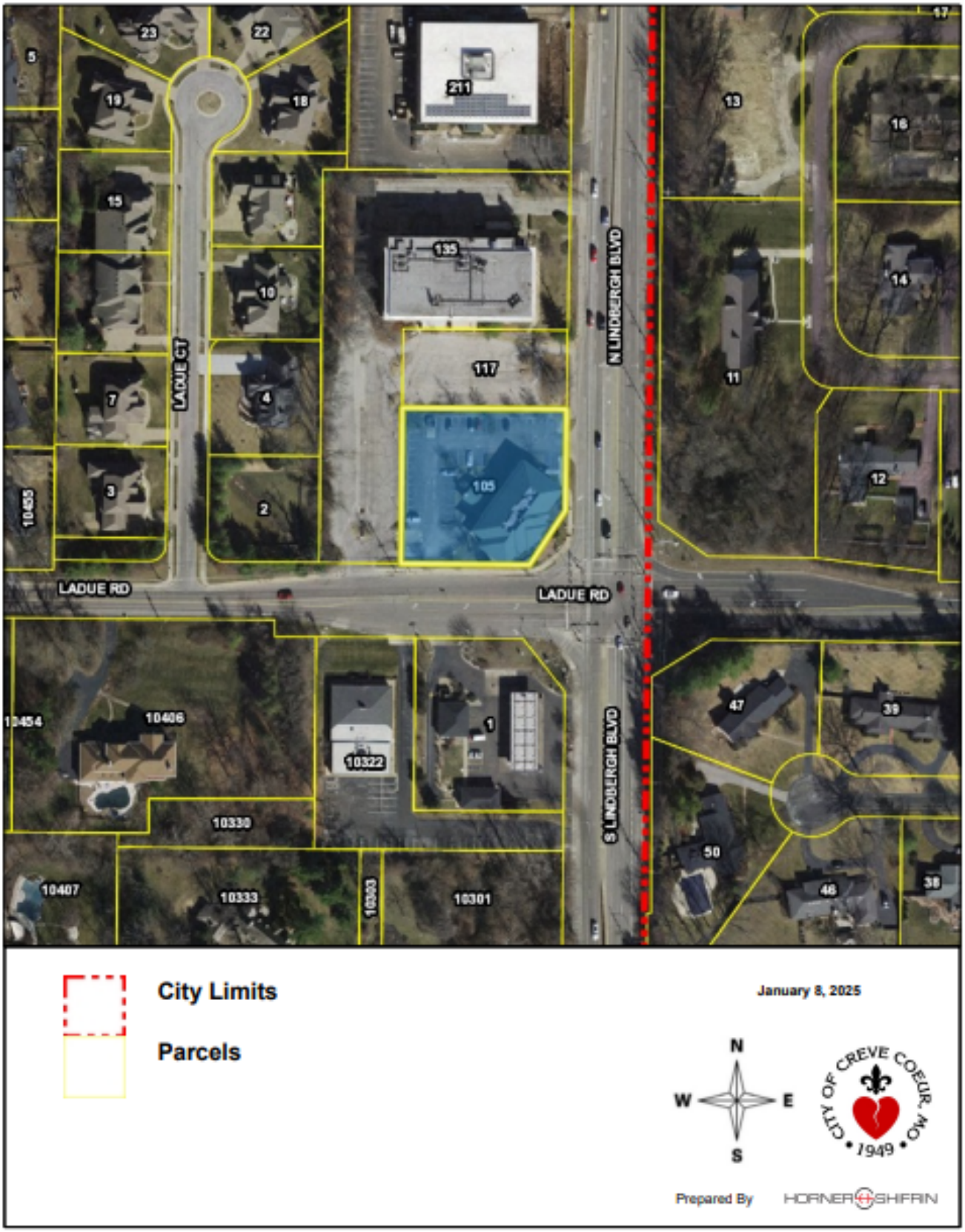

APPENDIX 4: SITE PHOTOGRAPHS	Photo Date: 1-16-25
	Description: View looking South at the rear of the building showing the former drive through area of the building.
	Description: Close-up view of the rear of the building showing the drive through lanes and overhead canopy that will be reutilized for the dispensary.

	Description: View of the front of the building taken from Google Maps looking Northeast at the intersection of Lindbergh and Ladue.

BILL NO. _____ **ORDINANCE NO. _____**

AN ORDINANCE AUTHORIZING THE ISSUANCE OF A CONDITIONAL USE PERMIT FOR A DRIVE THROUGH FACILITY FOR A COMPREHENSIVE MARIJUANA DISPENSARY, KEY CANNABIS LOCATED AT 105 NORTH LINDBERGH BOULEVARD

WHEREAS, under Section 405.360(C), a drive-through component for marijuana dispensaries in the "GC", General Commercial zoning district require the issuance of a conditional use permit as provided in Section 405.1070, Conditional Use Permits; and

WHEREAS, Chad Hanson, of Premier Architecture Design and Build, on behalf of Key Cannabis, on behalf of Key Cannabis Dispensary has submitted an application for a conditional use permit for a drive through component to the existing marijuana dispensary, at 105 North Lindbergh Boulevard; and

WHEREAS, a public hearing was held by the Creve Coeur Planning and Zoning Commission on Tuesday, January 21, 2025, beginning at 6:00 p.m. or immediately following the close of the previous public hearing, on said application for the conditional use permit as provided by Section 405.1070(D)(2); and

WHEREAS, notice of publication for said public hearing had been previously published at least 15 days prior to the hearing, in the St. Louis Countian, a newspaper of general circulation in the City of Creve Coeur; and

WHEREAS, the Planning and Zoning Commission reviewed and, by a __ vote, recommended approval of the conditional use permit, subject to the conditions contained herein, at its meeting on January 21, 2025; and

WHEREAS, all parties desiring to be heard, either for or against said application, were given an opportunity to be heard, and a copy of the proposed ordinance has been made available for public inspection prior to its consideration by the Council; and this Bill having been read by title in open meeting two times before final passage by the City Council, and

WHEREAS, the City Council finds that the application and evidence presented clearly indicate that the proposed conditional use, when subject to certain conditions set forth herein:

1. Complies with all applicable provisions of this Zoning Ordinance Chapter 405 including but not limited to environmental performance standards presented in Section 405.550, the criteria in Section 405.470 and the standards of this chapter in regard to yard and setback, parking and loading areas, screening and buffering, refuse, storage and service areas and signs.
2. Will contribute to and promote the welfare and convenience of the community at the specific location.
3. Will not cause substantial injury to the value of neighboring property.
4. Is consistent with the applicable provisions of the City's Comprehensive Plan and any applicable neighborhood or sector plans, unless good cause is demonstrated for deviation there from.
5. Will provide, if applicable, erosion control and on-site stormwater detention in accordance with the standards contained in this Chapter.
6. Will be compatible with the surrounding area and thus will not impose an excessive burden or have a substantial negative impact on surrounding or adjacent users or on pedestrian

or vehicular traffic or on community facilities or services, including but not limited to emergency services.

NOW, THEREFORE, be it ordained by the City Council of the City of Creve Coeur, St. Louis County, Missouri, as follows:

Section 1: A Conditional Use Permit is authorized to be issued pursuant to Section 3 hereof for the operation of a drive through component to the existing marijuana dispensary, at 105 North Lindbergh Boulevard in the "GC" General Commercial zoning district, whose legal description is as follows:

A tract of land in the East ½ of the Northwest ¼ of Section 12, Township 45 North, Range 5 East and described as follows:

Beginning at the intersection of the West line of Lindbergh Boulevard, 100 feet wide, with the North line of Ladue Road, 60 feet wide; thence North along said West line of Lindbergh Boulevard, 200 feet to a point; thence West and parallel with the North line of Ladue Road, 200 feet to a point; thence South and parallel with the West line of Lindbergh Boulevard, 200 feet to a point to the North line of Ladue Road; thence East along said North line Ladue Road, 200 feet to the beginning, EXCEPTING THEREFROM that part taken by condemnation cause No. 287401 a Report of Commissioners of which is recorded in Book 6326 page 1139.

Section 2: The Conditional Use Permit granted shall be subject to all applicable statutes, ordinances, rules and regulations, and the following conditions:

1. The Conditional Use Permit shall be for the operation of a drive through component associated with a marijuana dispensary at 105 N. Lindbergh Boulevard, with drive-thru facilities as shown in the "Site Development Plan" submitted on January 13, 2025 as bound together and submitted in conjunction with Application #25-039 by Premier Architecture, except as modified below.
2. Hours of operation for the drive through component shall be the same as the walk-in retail component, which is 8:00 a.m. to 10:00 p.m., seven days a week. Additional business hours may be permitted with the Zoning Administrator's approval.
3. No external speakers or menu boards shall be permitted.
4. The operator of the dispensary with a drive through shall maintain the existing landscaping and related site features including operation of the fountain, city gateway signage, decorative landscape walls and enhanced plantings as previously approved with the site development plan on file in the offices of the Department of Community Development. Any missing landscaping shall be replaced in accordance with the site development plan prior to receiving final occupancy of the drive through.
5. The parking lot, including drive aisles shall be repaired, as necessary, and resealed and striped prior to receiving final occupancy of the drive through component.
6. All lighting shall be in compliance with Section 405.680, Lighting, of the Zoning Ordinance.
7. All signs and banners shall be in conformance with Article VIII, Sign Regulations, of the Zoning Code and require permit approval.
8. Any future enlargement, extension, expansion, or alteration in the use of the structures or site must be approved by the City Council upon receipt of the recommendation of the Planning and Zoning Commission as an amendment to the Conditional Use Permit before a Building Permit for the enlargement, expansion or alteration may be issued.

9. Failure to comply with any one or all of the conditions of this permit shall be adequate cause for the revocation of said permit by the City Council, provided, however, no permit shall be revoked without prior notice to the owner of the intention of the City Council to revoke this permit and reasonable time granted to the owner to correct or remedy any such breach of conditions, except for repeated breaches or violations.
10. No conditional use permit granted by the City Council shall be valid for a period longer than one year from the date it grants the conditional use permit, unless within such period: (1) a building permit is obtained and construction is begun; or (2) if a building permit is not required, an occupancy permit is obtained, and the use of the building commenced. The City Council may grant extensions to the one (1) year period of not more than one hundred and eighty (180) days each, without notice or hearing, provided that a written request for such extension is filed by the original applicant and approved by the City Council prior to the date the conditional use permit is scheduled to expire.
11. Any transfer of ownership or lease of the property shall include in the transfer or lease agreement a provision that the purchaser or lessee agrees to the conditions herein set forth, and written confirmation thereof signed by the new owner or lessee shall be filed with the City at the time of such transfer or lease. Failure to comply with this provision shall not excuse anyone from these conditions.

Section 3: The City Administrator of the City of Creve Coeur is hereby authorized and directed to issue a Conditional Use Permit in accordance with the provisions of this ordinance, said permit to expressly provide for the conditions and stipulations hereinabove set out in Section 2 of this ordinance. Exercise of the rights granted pursuant to the issued permit shall constitute acceptance of all conditions and stipulations set forth herein.

Section 4: This ordinance shall become effective in accordance with Section 3.11 (g) of the City Charter.

ADOPTED THIS ____ DAY OF _____, 2025.

_____
TIM CARNEY
PRESIDENT OF CITY COUNCIL

APPROVED THIS ____ DAY OF _____, 2025.

_____
DR. ROBERT
HOFFMAN
MAYOR

ATTEST:

BILL NO. _____ **ORDINANCE NO. _____**

_____

KELLIE HENKE
CITY CLERK

NOTES:
A. Provide 24" Deep Tactile Warning Across The Full Width Of The Ramp As Shown. Tactile Warning Textures Shall Comply With ADA Standards.

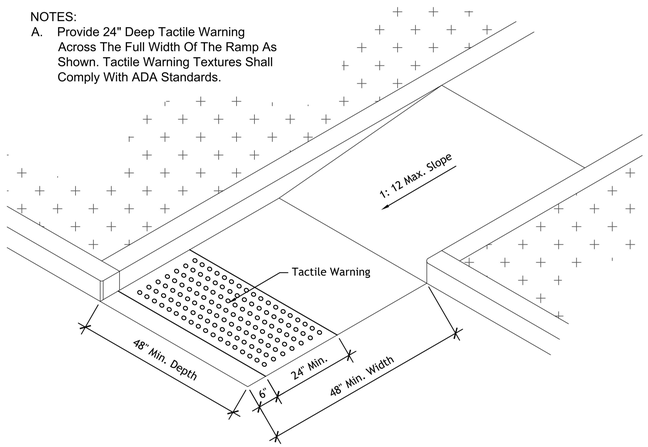

Curb Ramp Detail

2 L102 SCALE: NOT TO SCALE

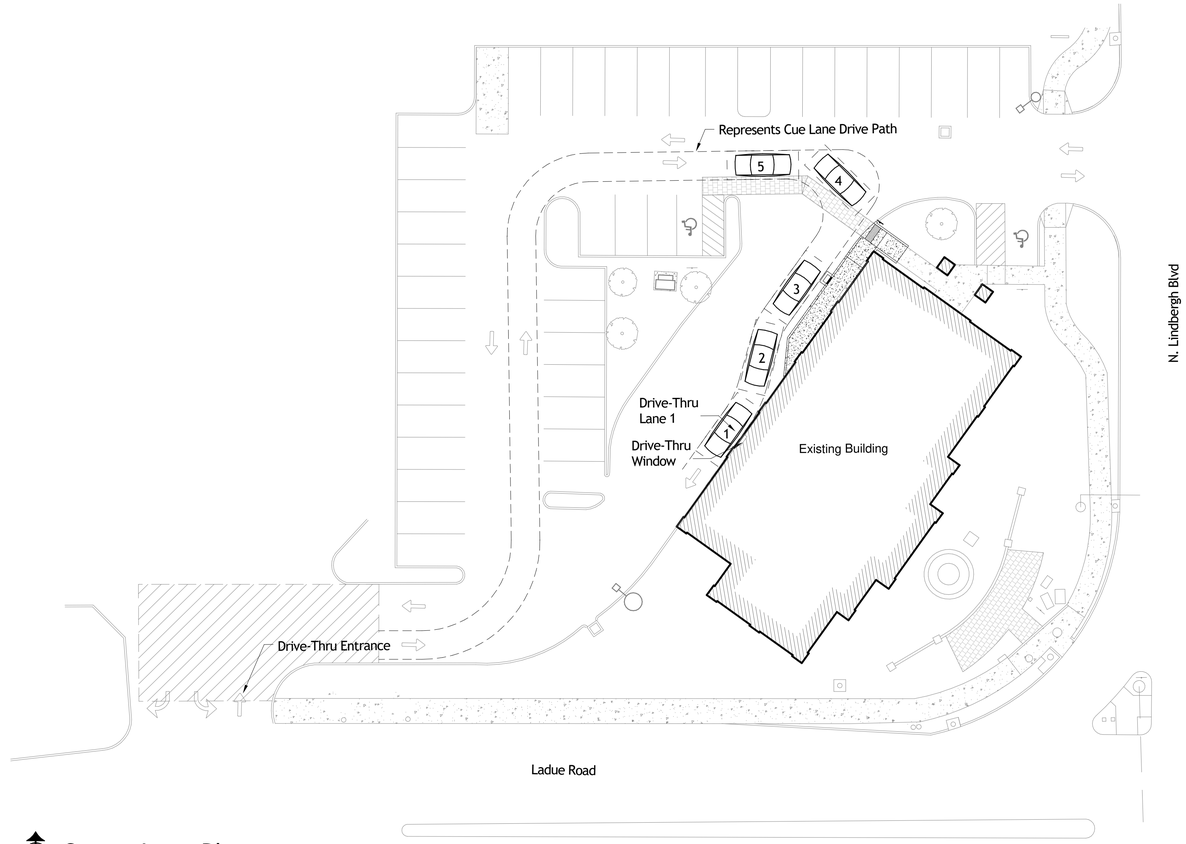

Queue Lane Plan

1 L102 SCALE: 1" = 20'-0"

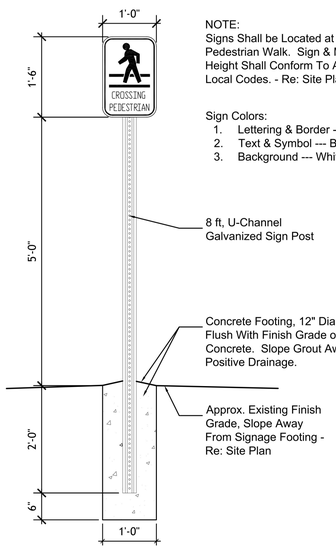

NOTE:
Signs Shall be Located at Each Pedestrian Walk. Sign & Mounting Height Shall Conform To All State & Local Codes. - Re: Site Plan

Sign Colors:
1. Lettering & Border --- Yellow
2. Text & Symbol --- Black
3. Background --- White

8 ft, U-Channel Galvanized Sign Post

Concrete Footing, 12" Dia. Install Flush With Finish Grade or Finish Concrete. Slope Grout Away for Positive Drainage.

Approx. Existing Finish Grade, Slope Away From Signage Footing - Re: Site Plan

Pedestrian Crossing Sign Detail

5 L102 SCALE: 3/4" = 1'-0"

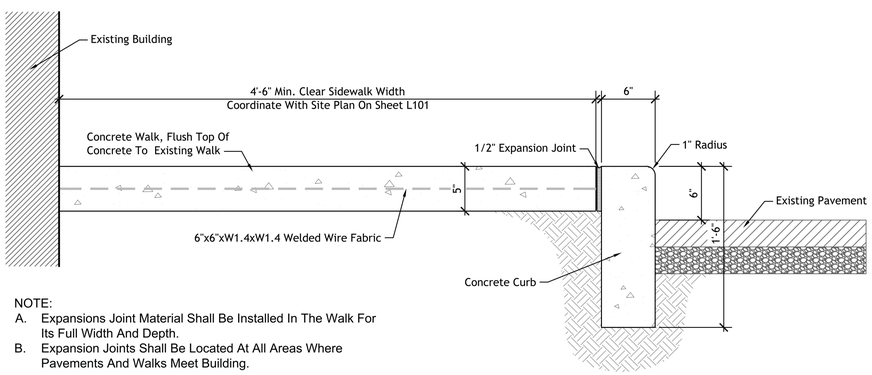

NOTE:
A. Expansions Joint Material Shall Be Installed In The Walk For Its Full Width And Depth.
B. Expansion Joints Shall Be Located At All Areas Where Pavements And Walks Meet Building.

Concrete Sidewalk Curb Detail

4 L102 SCALE: 1 1/2"=1'-0"

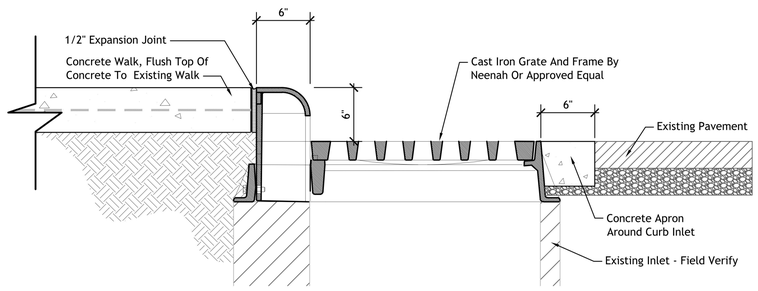

Grate Detail

3 L102 SCALE: 1 1/2"=1'-0"

PREMIER ARCHITECTURE
DESIGN AND BUILD

Seal:

I, Chad Hanson, a licensed architect in the state of Missouri, have prepared these preliminary drawings for the owner/using agency to use in their Conditional Use Permit (CUP) and Zoning Application only and is not intended for construction. These preliminary drawings are not to be used for construction.

Key Cannabis Dispensary

105 N. Lindbergh Blvd

Document Date:
12/18/24
Document Phase:
CUP Application

rev.	date	remark
1	12/18/24	CUP Submission
2	01/09/25	CUP Revisions

Drawn By: MG

Drive-Thru Cue

L102

Project No.: 24023

© Premier Architecture Design Build, LLC The use of these plans and specifications is restricted to the original site for which they were prepared. Re-use, reproduction or publication by any method in whole or in part is prohibited, unless authorized by Premier Architecture Design and Build, LLC. Ownership of the design, plans and specifications is solely with Premier Architecture Design and Build, LLC.

Autodesk Docs://24023 Elevate Grove Cove/ MO/24023 Elevate Grove Cove MO.rvt 1/10/2025 5:00:24 PM

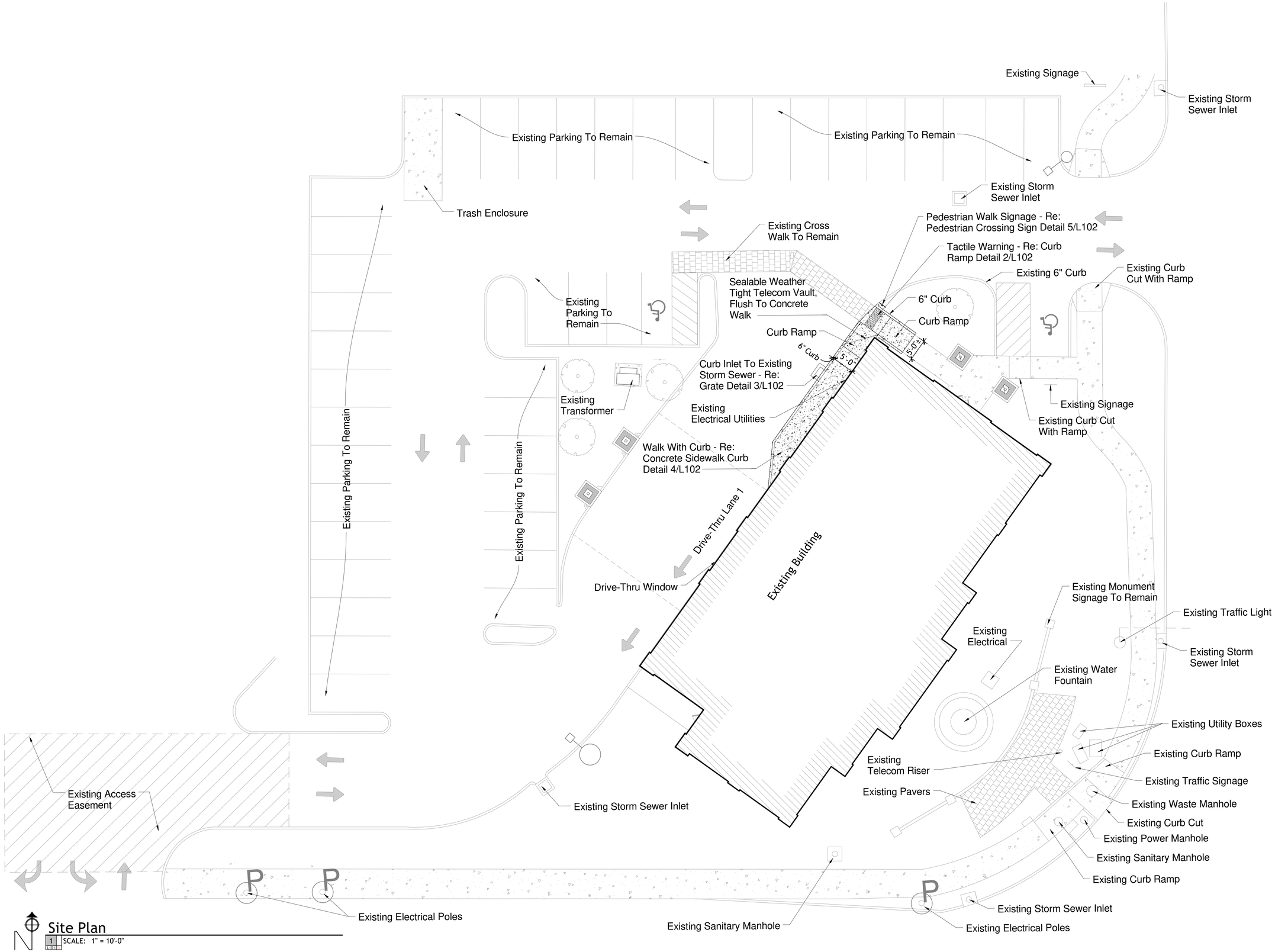

Site Plan

1 SCALE: 1" = 10'-0"
L101

PREMIER ARCHITECTURE
DESIGN AND BUILD

Seal:

STATE OF MISSOURI
CHAD L. HANSON
NUMBER A-2007035237
ARCHITECT

I, Chad Hanson, a licensed architect in the state of Missouri, have prepared these preliminary drawings for the owner/using agency to use in their Conditional Use Permit (CUP) and Zoning Application only and is not intended for construction. These preliminary drawings are not to be used for construction.

Key Cannabis Dispensary

105 N. Lindbergh Blvd

Document Date:
12/18/24
Document Phase:
CUP Application

rev.	date	remark
1	12/18/24	CUP Submission
2	01/09/25	CUP Revisions

Drawn By: MG

Site Plan

L101

Project No.: 24023

1/10/2025 4:59:21 PM

Autodesk Docs://24023 Elevate Cove/400/24023 Elevate Cove Cons MO.rvt

© Premier Architecture Design Build, LLC The use of these plans and specifications is restricted to the original site for which they were prepared. Re-use, reproduction or publication by any method in whole or in part is prohibited, unless authorized by Premier Architecture Design and Build, LLC. Ownership of the design, plans and specifications is solely with Premier Architecture Design and Build, LLC.

Exterior Perspective

2 | SCALE:

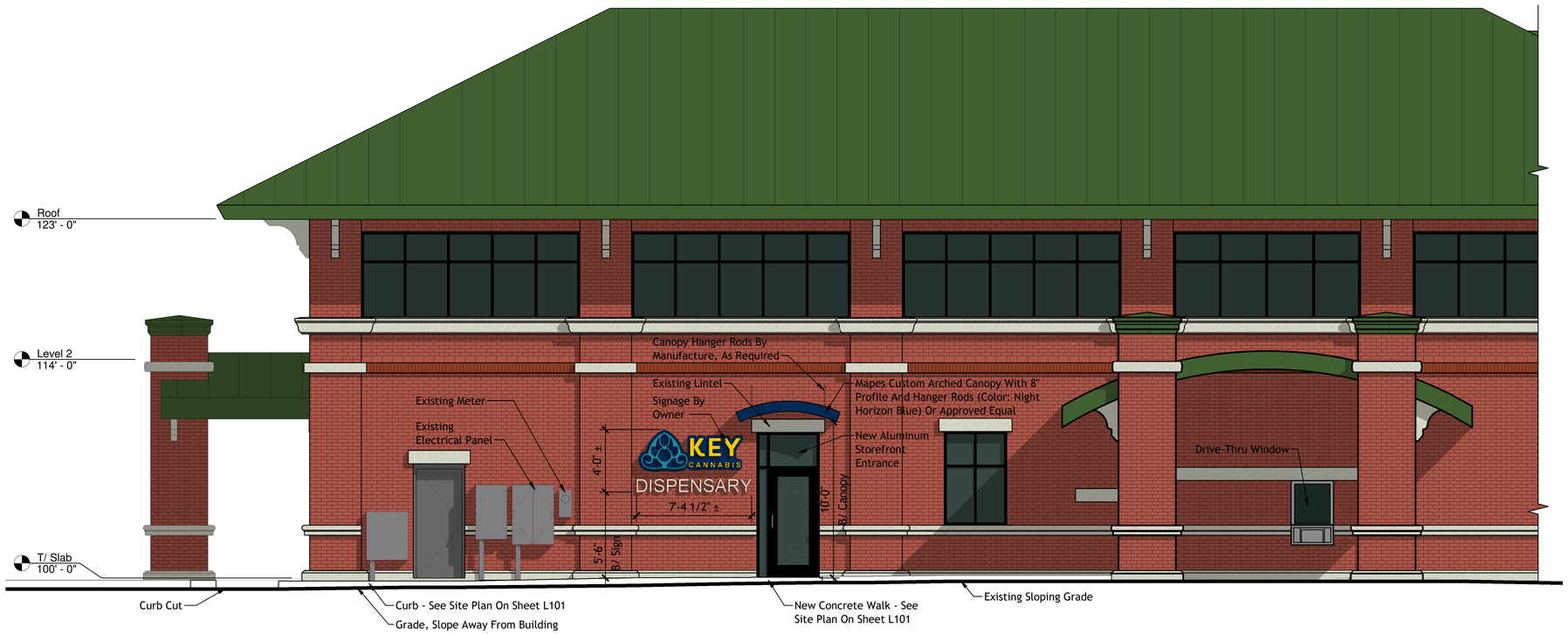

Partial Northwest Elevation

1 | SCALE: 1/4" = 1'-0"

PREMIER ARCHITECTURE
DESIGN AND BUILD

Seal:

I, Chad Hanson, a licensed architect in the state of Missouri, have prepared these preliminary drawings for the owner/using agency to use in their Conditional Use Permit (CUP) and Zoning Application only and is not intended for construction. These preliminary drawings are not to be used for construction.

Key Cannabis Dispensary

105 N. Lindbergh Blvd

Document Date:
12/18/24

Document Phase:
CUP Application

rev.	date	remark
1	12/10/24	Skch Ele 02
2	12/11/24	Skch Ele 02 - Notes
3	12/18/24	CUP Submission
4	01/09/25	CUP Revisions

Drawn By: MG

Exterior Elevation & Perspective

A201

Project No.: 24023

1/10/2025 5:13:22 PM

Autodesk Docs://24023 Elevate Crème Coeur MO/24023 Elevate Crème Coeur MO.rvt

© Premier Architecture Design Build, LLC The use of these plans and specifications is restricted to the original site for which they were prepared. Re-use, reproduction or publication by any method in whole or in part is prohibited, unless authorized by Premier Architecture Design and Build, LLC. Ownership of the design, plans and specifications is solely with Premier Architecture Design and Build, LLC.

city of CREVE COEUR

300 North New Ballas Road • Creve Coeur, Missouri 63141
(314) 432-6000 • Fax (314) 872-2539
www.crevecoeurmo.gov

APPLICATION TO PLANNING AND ZONING COMMISSION
#24-036: CONDOMINIUM PLAT FOR ADJUSTED LOT 2 OF THE BOUNDARY ADJUSTMENT PLAT WESTCHASE SHOPS SUBDIVISION

FOR THE MEETING OF: Tuesday, January 21, 2025

LOCATION: 10901 Olive Boulevard, Zoned "CB" Core Business District

REQUEST: David Hutkin, of 10923 Olive Partners, LLC, has submitted an application for a condominium plat for the property located at 10901 Olive Boulevard. No changes to the site or to the existing building are proposed in conjunction with this application.

ADDITIONAL INFORMATION: Final Plats require Planning and Zoning Commission review and recommendation to the City Council for approval.

Key Issues:
- Does the request further the goals and/or implement the Comprehensive Plan?
- Is the request consistent with the requirements for final plats?

Creve Coeur 2030 Plan References
- Neighborhood Commercial District Design Guidelines

Code References
- Section 405.270: "CB" Core Business Zoning District
- Chapter 410 Subdivision and Development of Land

APPLICANT: David Hutkin
10923 Olive Partners, LLC
10829 Olive Blvd Suite 200
Creve Coeur, M63141

APPLICANT'S REPRESENTATIVE: Same as applicant

REPORT PREPARED BY: Jason Jaggi, Director of Community Development
DATE: 1/16/2025
ATTACHMENTS: Condominium Plat drawing dated 11-29-23
10901 Olive Boulevard Condominium Declaration

DISCUSSION

David Hutkin, on behalf of 10923 Olive Partners, LLC, has submitted a subdivision application for a condominium plat at 10901 Olive Boulevard. This property is commercially-zoned within the Core Business "CB" District and currently is the location for a bank with a drive-through component, a frozen yogurt shop, a weight loss center, and a salon. This multi-tenant retail building was developed in 2005 and is one of two lots located within the Westchase Shops Subdivision. The other property within the subdivision is the multi-tenant retail building to the west addressed 10923 Olive Boulevard. These two lots have a shared entrance on Olive Boulevard with cross-access between the two properties.

Condominium plats are unique in that they subdivide property for ownership purposes. Condominium plats are regulated by the State of Missouri under the Condominium Property Act, (Chapter 448 RSMo). The City does not have a specific procedure for review of condominium plats; however, they have historically been reviewed under the City's subdivision code, similar to a final plat, which requires a recommendation from the Planning and Zoning Commission and final approval by the City Council. After City Council approval, the City's certification can be applied to the plat for recording at St. Louis County.

The submitted condominium plat applies only to the eastern lot within the Westchase Subdivision, Adjusted Lot 2 addressed 10901 Olive Boulevard. The plat would establish two units for the building: the current bank occupying Unit 1 and the other tenants occupying Unit 2. The drive-through bank canopy to the rear of the building is shown as a Limited Common Element which is tied to Unit 1. The remainder of the exterior elements of the site including the frontage of the building, parking areas and seating plaza are not depicted as common elements on the plat. Staff recommends these areas be clearly labeled on the condominium plat as common elements and has included a corresponding condition of approval.

Along with the plat drawing, condominium developments are required to submit a Declaration. This document provides, among other things, the requirements for management of the condominium, the rights of the unit owners, the structure to collect assessments for the maintenance of the property and describes the common elements and limited common elements outside of the units. The Declaration is similar in purpose to subdivision indentures that form homeowners' associations to deal with similar matters. The City Attorney has reviewed the declaration submitted with this request and finds it to be acceptable. It is recommended that future amendments to the Declaration be reviewed by the City Attorney prior to recording. A condition has been included to require this review.

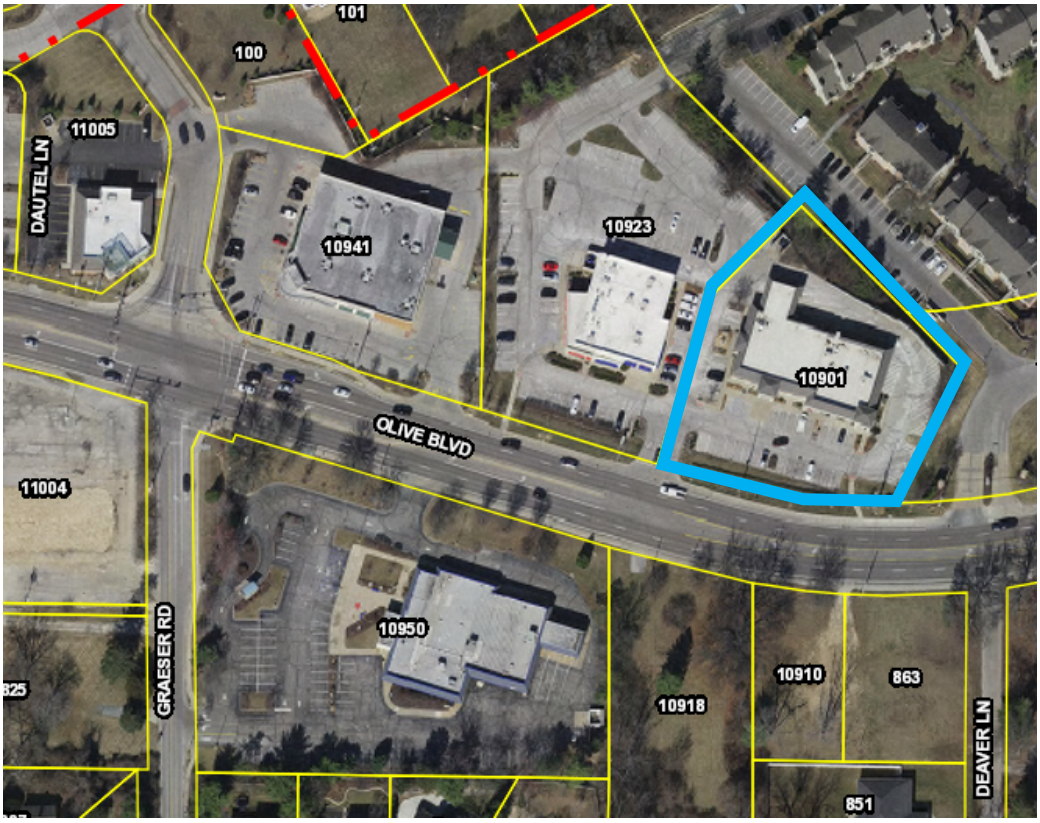

Figure 1: Aerial Image showing the boundaries of the proposed condominium plat.

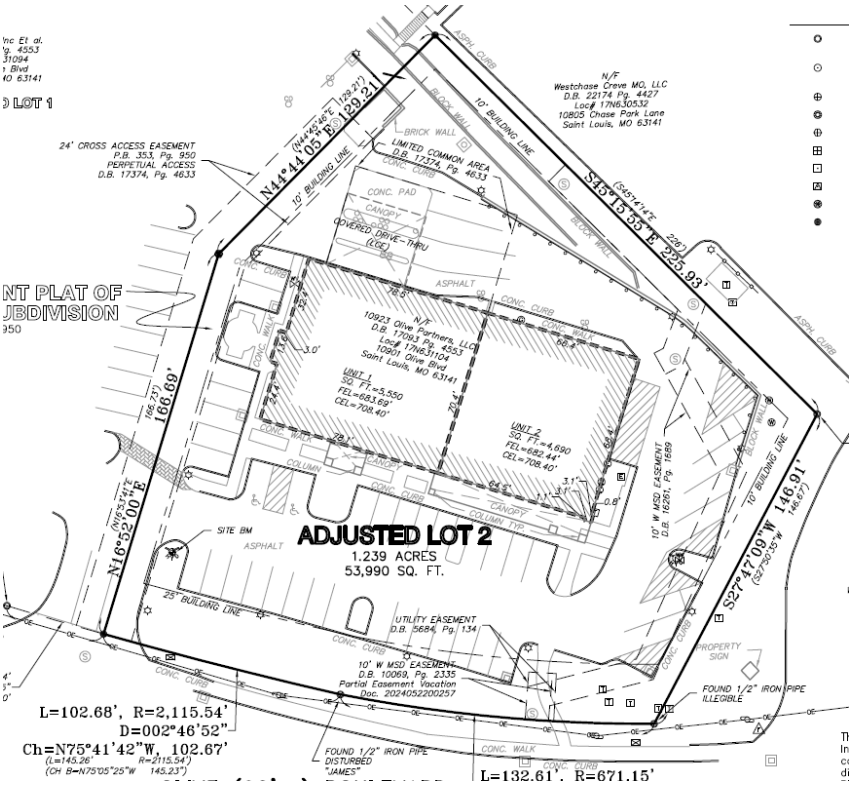

Figure 2: Close up view of Condominium Plat

Technical Review
As mentioned previously in this report, the City does not have a defined procedure for condominium plats and condominium plats are subject to State law. Staff has reviewed the application under the applicable portions of Chapter 410 Subdivision and Development of Land, including Sections 410.140 Final Plats and 410.310 Common Open Space or Facilities.

Staff concludes that the condominium plat meets the applicable provisions of Chapter 410, subject to the following conditions:

1. A revised drawing be submitted prior to recording that clearly defines the common elements
2. The Declaration be amended to include a provision requiring City Attorney review of any amendments prior to recording of an amended Declaration.
3. The final drawing be prepared for signature and recording
4. A PDF version of the recorded drawing be provided to the City

ACTION
If the members of the Planning Commission are satisfied that the requested condominium plat meets the applicable requirements of the Subdivision Code and is otherwise appropriate, a vote to provide a recommendation to the City Council would be appropriate.

MOTION
The following is an example of a motion for this application:

> "I move to recommend approval of the condominium plat to the City Council for Adjusted Lot 2 of the Westchase Shops Subdivision, 10901 Olive Boulevard, as described in the staff report on application #24-036 received December 18, 2024 subject to the conditions contained in this staff report." (Conditions may be added, eliminated, or modified by preceding motion).

APPENDIX 1: ZONING CODE (CHAPTER 405 OF THE CREVE COEUR MUNICIPAL CODE)
Included and attached by reference. See body of report for specific excerpts.

APPENDIX 2: CREVE COEUR SUBDIVISION AND LAND DEVELOPMENT REGULATIONS (CHAPTER 410 OF THE CREVE COEUR MUNICIPAL CODE)
Included and attached by reference. See body of report for specific excerpts.

APPENDIX 3: AERIAL PHOTO

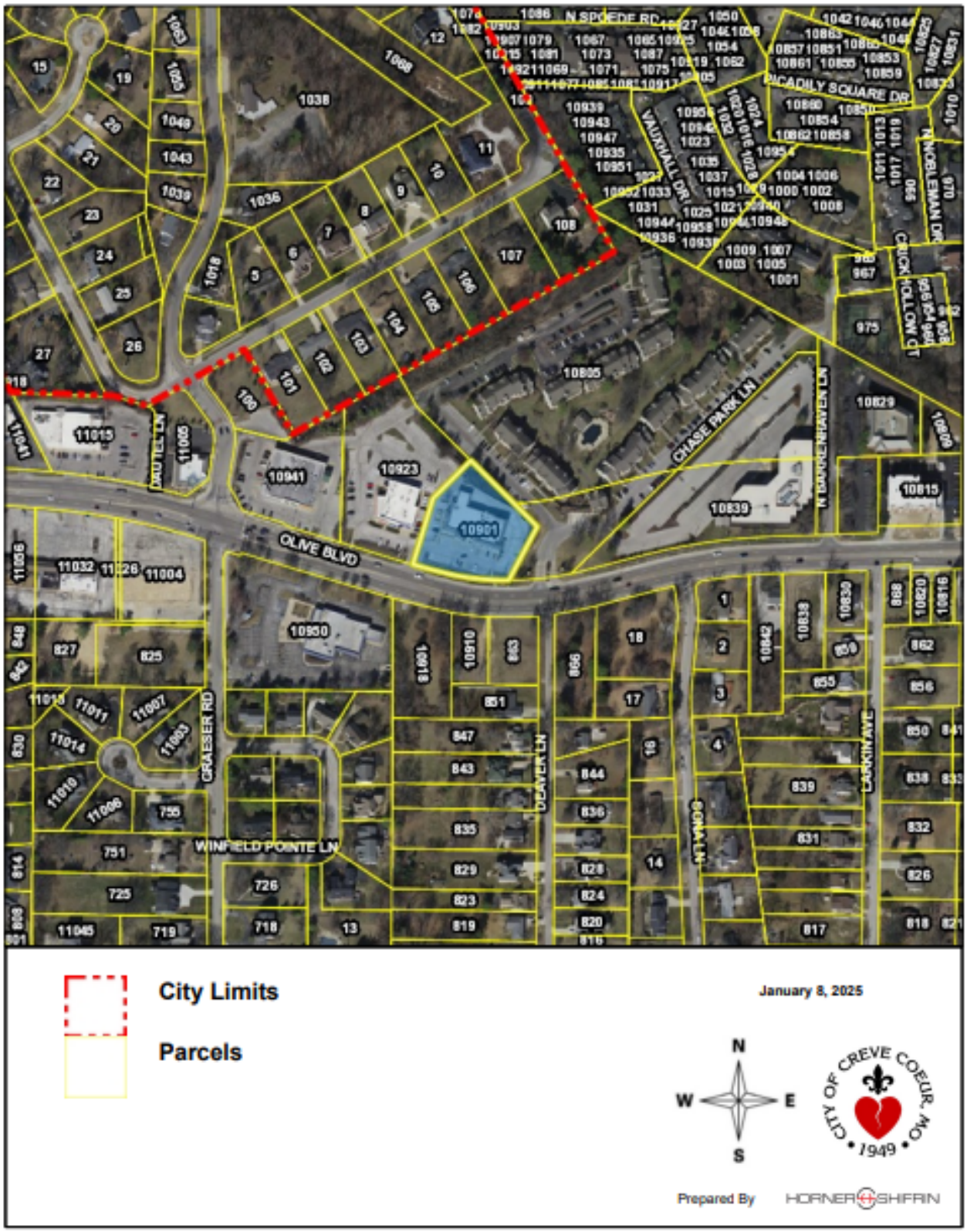

BILL NUMBER _____ **ORDINANCE NUMBER _____**

AN ORDINANCE APPROVING A CONDOMINIUM PLAT FOR 10901 OLIVE BOULEVARD IN THE CITY OF CREVE COEUR, ST. LOUIS COUNTY, MISSOURI

WHEREAS, an application has been submitted by David Hutkin, of 10923 Olive Partners, LLC, for approval of a Condominium Plat known as 10901 Olive Condominiums, located at 10901 Olive Boulevard; and

WHEREAS, a Condominium Plat for said property and accompanying Condominium Declaration have been submitted for approval in accordance with Chapter 448 RSMo, and

WHEREAS, said property is currently zoned CB-Core Business District and said Condominium Plat does not propose any changes to the site development plan for the property; and

WHEREAS, the Planning and Zoning Commission recommended approval of the Condominium Plat by a vote of ____ on January 21, 2025; and

WHEREAS, a copy of the proposed ordinance has been made available for public inspection prior to its adoption by the City Council and this bill having been read by title in open meeting two times before final passage by the City Council;

NOW, THEREFORE, be it ordained by the City Council of the City of Creve Coeur, Missouri, as follows:

SECTION 1: The Condominium Plat known as 10901 Olive Boulevard, described as a Tract of land being adjusted lot 2 of the Boundary Adjustment Plat Westchase Shops Subdivision, City of Creve Coeur, Missouri, as heretofore submitted on December 18, 2024 is hereby approved subject to the following conditions:

1. A revised drawing be submitted prior to recording that clearly defines the common elements

2. The Declaration be amended to include a provision requiring City Attorney review of any amendments prior to recording of an amended Declaration.

3. The final drawing be prepared for signature and recording

4. A PDF version of the recorded drawing be provided to the City

SECTION 2: Upon satisfaction of the conditions set forth in Section 1, such approval of the condominium plat shall be endorsed on said Plat under the hand of the City Clerk, and the seal of the City of Creve Coeur, Missouri shall be affixed thereto.

SECTION 3: This ordinance shall become effective in accordance with Section 3.11 (g) of the City Charter.

ADOPTED THIS ____ DAY OF _____, 2025.

_____
TIM CARNEY
PRESIDENT OF CITY COUNCIL

APPROVED THIS ____ DAY OF _____, 2025.

_____
DR. ROBERT HOFFMAN
MAYOR

ATTEST:

_____
KELLIE HENKE
CITY CLERK

10901 OLIVE BOULEVARD

A CONDOMINIUM PLAT

A TRACT OF LAND BEING ADJUSTED LOT 2 OF THE BOUNDARY ADJUSTMENT PLAT WESTCHASE SHOPS SUBDIVISION, CITY OF CREVE COEUR ST. LOUIS COUNTY, MISSOURI

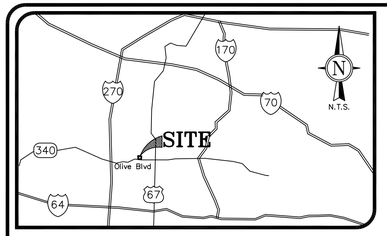

--- Owner's Certification ---

I the undersigned owner of land hereupon platted and further described in the foregoing description, have caused these lots to be subdivided in land area in the manner shown on this plat, which boundary adjustment shall hereafter be known as "10901 OLIVE BOULEVARD, A CONDOMINIUM PLAT."

There is a single monument sign which identifies the tenants in the buildings located on both Lots 1 and 2. Maintenance of this sign shall be shared by the owners of said Lots.

In witness whereof, I have herewith set my hand this _____ day of _____, 2024.

10901 Olive Partners, LLC
A Missouri Limited Liability Company

_____ _____
Print Name, Title

State of Missouri)
)SS.
County of St. Louis)

On this _____ day of _____, 2024 before me did appear _____ who being by me duly sworn did say that he is the _____ of 10901 Olive Partners, LLC, a limited liability company in the State of Missouri and that said instrument was signed on behalf of said company and that said _____ _____ acknowledged said instrument to be the free act and deed of said company.

In testimony whereof, I have herewith set my hand and affixed my official seal in the County and State aforesaid the day and year last above written.

_____ My commission expires: _____
Notary Public

--- Owner's Certification ---

I the undersigned owner of land hereupon platted and further described in the foregoing description, have caused these lots to be subdivided in land area in the manner shown on this plat, which boundary adjustment shall hereafter be known as "10901 OLIVE BOULEVARD, A CONDOMINIUM PLAT."

There is a single monument sign which identifies the tenants in the buildings located on both Lots 1 and 2. Maintenance of this sign shall be shared by the owners of said Lots.

In witness whereof, I have herewith set my hand this _____ day of _____, 2024.

10923 Olive Partners, LLC
A Missouri Limited Liability Company

_____ _____
Print Name, Title

State of Missouri)
)SS.
County of St. Louis)

On this _____ day of _____, 2024 before me did appear _____ who being by me duly sworn did say that he is the _____ of 10923 Olive Partners, LLC, a limited liability company in the State of Missouri and that said instrument was signed on behalf of said company and that said _____ _____ acknowledged said instrument to be the free act and deed of said company.

In testimony whereof, I have herewith set my hand and affixed my official seal in the County and State aforesaid the day and year last above written.

_____ My commission expires: _____
Notary Public

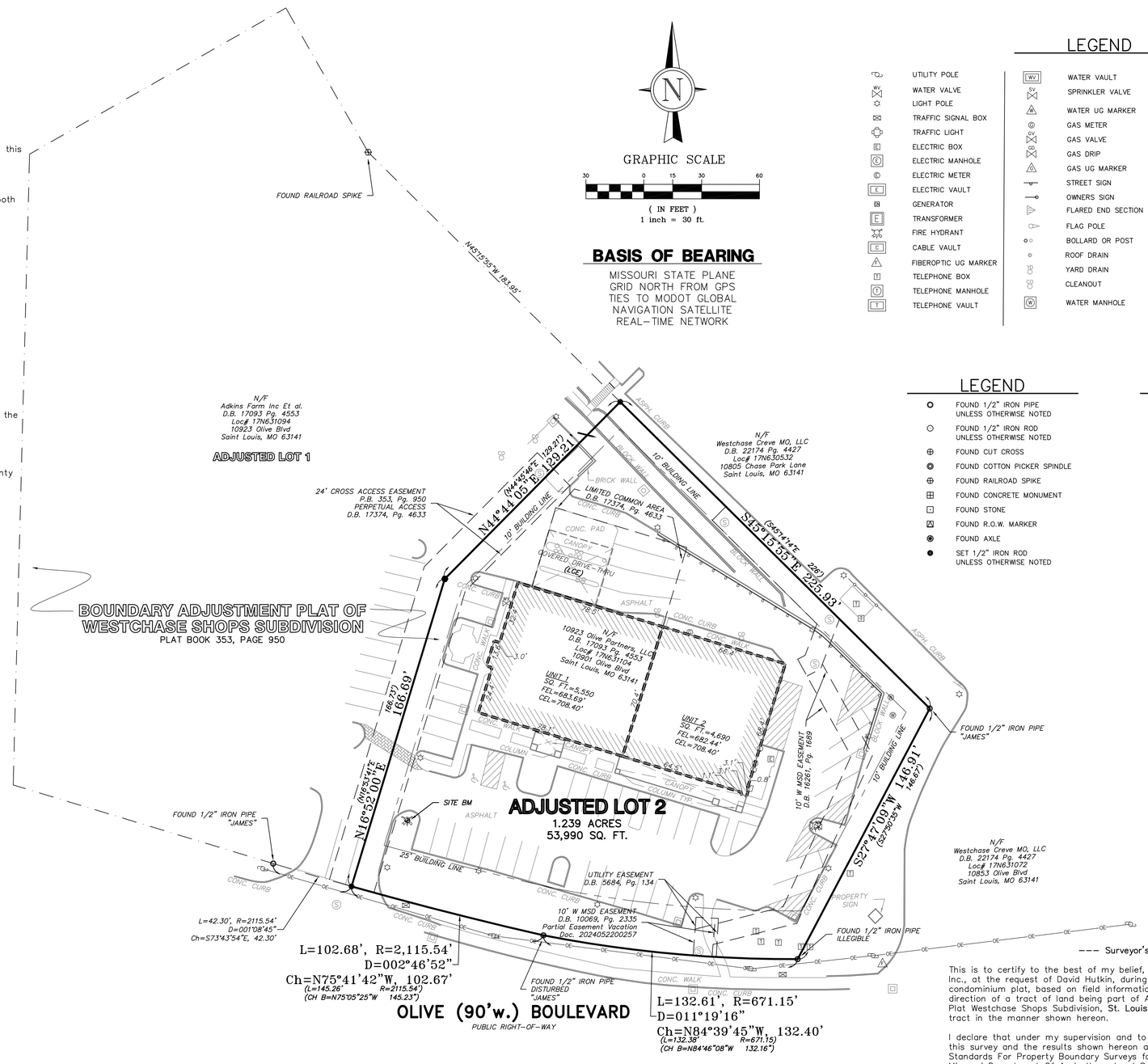

LEGEND

	UTILITY POLE	WV	WATER VAULT		TERMINUS UNKNOWN
WV	WATER VALVE	SV	SPRINKLER VALVE		STORM DRAIN W/GRATE INLET
	LIGHT POLE		WATER UG MARKER		STORM DRAIN W/AREA INLET
	TRAFFIC SIGNAL BOX		GAS METER		STORM DRAIN W/MANHOLE
	TRAFFIC LIGHT	GV	GAS VALVE		STORM DRAIN W/GRATE MANHOLE
E	ELECTRIC BOX	GD	GAS DRIP	S SAN	SANITARY SEWER W/MANHOLE
E	ELECTRIC MANHOLE		GAS UG MARKER		TRENCH DRAIN
E	ELECTRIC METER		STREET SIGN	OE	OVERHEAD ELECTRIC LINE
E	ELECTRIC VAULT		OWNERS SIGN	UE	UNDERGROUND ELECTRIC LINE
G	GENERATOR		FLARED END SECTION	UT	UNDERGROUND TELEPHONE LINE
E	TRANSFORMER		FLAG POLE	W	WATER LINE
	FIRE HYDRANT		BOLLARD OR POST	G	GAS LINE
C	CABLE VAULT		ROOF DRAIN	X	FENCE: CHAIN LINK OR WIRE
	FIBEROPTIC UG MARKER		YARD DRAIN	O	FENCE: WOOD CONSTRUCTION
T	TELEPHONE BOX		CLEANOUT		HANDRAIL
T	TELEPHONE MANHOLE	W	WATER MANHOLE		GUARDRAIL
T	TELEPHONE VAULT			W	WATER METER

LEGEND

○	FOUND 1/2" IRON PIPE UNLESS OTHERWISE NOTED
⊙	FOUND 1/2" IRON ROD UNLESS OTHERWISE NOTED
⊕	FOUND CUT CROSS
	FOUND COTTON PICKER SPINDLE
	FOUND RAILROAD SPIKE
	FOUND CONCRETE MONUMENT
	FOUND STONE
	FOUND R.O.W. MARKER
	FOUND AXLE
●	SET 1/2" IRON ROD UNLESS OTHERWISE NOTED

ABBREVIATIONS

N/F	NOW OR FORMERLY
D.B.	DEED BOOK
P.B.	PLAT BOOK
Pg.	PAGE
w/	WITH
(TYP.)	TYPICAL
P.O.B.	POINT OF BEGINNING
CONC.	CONCRETE
RCP	REINFORCED CONCRETE PIPE
VCP	VITRIFIED CLAY PIPE
CPP	CORRUGATED PLASTIC PIPE
C-LINK	CHAIN LINK
W-IRON	WROUGHT IRON
PCZ	PER CURRENT ZONING
PR.	PROPOSED
(xx)	RECORD BEARING AND/OR DISTANCE
LCE	LIMITED COMMON ELEMENT

--- CITY OF CREVE COEUR CERTIFICATION ---

I, Kellie Henke, City Clerk for and within the City of Creve Coeur, Missouri, do hereby certify that this Condominium Plat is in complete compliance with ordinance #1045 approved on the ___ day of _____, 2024, as approved by the City Council of the City of Creve Coeur.

In witness whereof, I have set my hand and affixed the official seal of the City of Creve Coeur, Missouri.

CITY OF CREVE COEUR, MISSOURI

_____
Kellie Henke, City Clerk

--- Property Boundary Description ---

A tract of land being all of the Adjusted Lot 2 of the Boundary Adjustment Plat Westchase Shops Subdivision recorded in Plat Book 353 at page 950 of the St. Louis County land records, and being in the Northeast Quarter of Section 2, Township 45 North, Range 5 East, located in St. Louis County, Missouri

--- Surveyor's Certification ---

This is to certify to the best of my belief, knowledge, and ability that Grimes Consulting, Inc., at the request of David Hutkin, during the month of November, 2023, prepared a condominium plat, based on field information obtained from field personnel under my direction of a tract of land being part of Adjusted Lot 2 of the Boundary Adjustment Plat Westchase Shops Subdivision, **St. Louis County,** Missouri, and have consolidated said tract in the manner shown hereon.

I declare that under my supervision and to the best of my professional judgment that this survey and the results shown hereon are made in accordance with the current Standards For Property Boundary Surveys for Urban Class Property as set forth by the Missouri Department Of Agriculture, Land Survey Program, and rules promulgated by The Missouri Board For Architects, Professional Engineers, and Professional Land Surveyors and Professional Landscape Architects effective June 30, 2022.

IN WITNESS WHEREOF, we hereunto set our firm name at our office in St. Louis County, Missouri this 31 day of May, 2024.

GRIMES CONSULTING, INC. LS-343-D

By R. Cory Spence
R. CORY SPENCE, PLS No. 2015017842
MISSOURI PROFESSIONAL LAND SURVEYOR

STATE OF MISSOURI R. CORY SPENCE PLS-2015017842 PROFESSIONAL LAND SURVEYOR

PREPARED FOR:
HUTKIN PROPERTIES GROUP, LLC.
CONTACT: David Hutkin
10829 Olive Boulevard, Suite 200
ST. LOUIS, MO 63141
EMAIL: dhutkin@hutkin.com

Civil / Survey
GRIMES CONSULTING, INC.
12300 OLD TESSON RD.
SUITE 300D
ST. LOUIS, MO 63128
PH. (314) 849-6100
FAX (314) 849-6010
www.grimesconsulting.com
PE COA# E-1470-D
PLS COA# LS-343-D

REV. NO.	REMARKS	DATE
1	Attorney comments.	02/29/24
2	Vacated MSD easement.	05/31/24
3		
4		
5		

10901 OLIVE BOULEVARD
10901 OLIVE BLVD, ST. LOUIS, 63141

SHEET TITLE
CONDOMINIUM PLAT

JOB NUMBER: 4123
DRAWN BY: TSS
DATE: 11/29/23
CHECKED BY: RCS
DATE: 11/29/23
SHEET: 1 of 1

© 2024 Grimes Consulting, Inc. All rights reserved

J:\4123\4123\Drawings\Survey\4123_Condo.dwg\05/31/2024 2:38 PM\Cory Spence

THE 10901 OLIVE BOULEVARD CONDOMINIUM DECLARATION OF CONDOMINIUM

February __, 2025

10923 Olive Partners, LLC and 10901 Olive Partners, LLC
c/o Hutkin Properties Group, L.L.C.
10829 Olive Boulevard, Suite 200
Creve Coeur, MO 63141

THE 10901 OLIVE BOULEVARD CONDOMINIUM DECLARATION OF CONDOMINIUM

This Declaration of Condominium (the "Declaration") is made this ____ day of February, 2025, by **10923 Olive Partners, LLC**, a Missouri limited liability company and **10901 Olive Partners, LLC**, a Missouri limited liability company (hereinafter collectively, referred to as "Declarant").

WHEREAS, Declarant is the owner in fee simple of real property located in the City of Creve Coeur, County of St. Louis, Missouri, legally described on Exhibit A attached hereto and incorporated herein by this reference (the "Land"); and

WHEREAS, Declarant intends by this Declaration to submit the Property (as defined in Section 1.17 below) to the provisions of the Uniform Condominium Act of the State of Missouri, Sections 448.1-101 to 448.4-120 of R.S.Mo., in effect as the date of the recording of this Declaration (the "Act").

NOW THEREFORE, Declarant, as owner of the Property, for the purposes above set forth, does hereby declare the Property to be a "Condominium" hereinafter known as The 10901 Olive Boulevard Condominium, under the Act, and further declares and provides as follows:

ARTICLE I
Definitions

The following terms, as used herein or elsewhere in any condominium documents relating to The 10901 Olive Boulevard Condominium, unless otherwise specifically provided, shall have the meaning set forth below:

1.1. Affiliate – Any person or entity which, directly or indirectly through one (1) or more intermediaries, controls or is controlled by or is under common control with another person or entity. The term "control" as used herein (including the terms "controlling", "controlled by" and "under common control with") means the possession, direct or indirect, of the power to (i) vote more than fifty percent (50.0%) of the outstanding voting securities of such person or entity, or (ii) otherwise direct management policies of such person by contract or otherwise.

1.2. Articles of Incorporation – The Articles of Incorporation of the Association, as they exist from time to time.

1.3. Association – The 10901 Olive Boulevard Condominium Association, a Missouri nonprofit corporation formed pursuant to Chapter 355, R.S.Mo.

1.4. Board – The Board of Directors that manages the Association.

1.5. Buildings – The building located on the Land and being Unit 1, consisting of one building containing approximately 5,550 square feet of floor area and the building located on the Land and being Unit 2 consisting of one building containing approximately 4,690 square feet of floor area.

1.7. Common Elements – All portions of the Condominium that benefit either (i) more than one Unit, (ii) any Unit in which the particular Common Element or Limited Common Element is not located, or (iii) which shall be identified on the Plat or any Revised Plat as Common Elements or Limited Common Elements, including, without limitation, the Land, together with all easements, rights and privileges appurtenant thereto other than those which are exclusively appurtenant to, or for the benefit of, one Unit.

1.8. Common Expenses – All sums declared as Common Expenses by the Act, or by any specific provision of this Declaration or the Bylaws, and shall include the actual or estimated costs or expenses incurred or to be incurred by the Association or financial liabilities of the Association including, without limitation, the following:

(a) the cost of maintenance, management, operation, repair and replacement of the Common Elements (including Limited Common Elements the cost of which shall be assessed against the individual Unit Owner and Unit to which appurtenant as provided in Section 3.4 below) and all other areas within the Condominium which are maintained by the Association;

(b) the cost of management and administration of the Association including, without limitation, compensation paid by the Association to managers, accountants, attorneys, architects and employees. Notwithstanding any provision of this Declaration to the contrary, it is expressly agreed that the Association may enter into a property management agreement with Declarant or an Affiliate of Declarant for Declarant (or its Affiliate) to serve as the property manager for the Condominium;

(c) the cost of any utilities, trash pickup and disposal, landscaping and other services benefitting the Unit Owners and their Units to the extent such services are paid for by the Association;

(d) the cost of fire, casualty, liability, worker's compensation and other insurance maintained by the Association as provided in this Declaration;

(e) reasonable reserves as deemed appropriate by the Board or otherwise required under this Declaration or the By-Laws;

(f) the cost of bonding the Board, officers and employees of the Association, any professional managing agent or any other person handling funds of the Association;

(g) taxes paid by the Association;

(h) amounts paid by the Association for the discharge of any lien or encumbrance levied against the Common Elements or portions thereof;

(i) cost and expenses, if any, incurred by the Association under the ECR Agreement; and

(j) the cost of any other item or items incurred by the Association for any reason whatsoever in furtherance of the purposes or the discharge of the obligations imposed on the Association by this Declaration, the By-Laws or otherwise.

1.9. Condominium – The condominium created by this Declaration and known as The 10901 Olive Boulevard Condominium.

1.10. Declarant – collectively, 10923 Olive Partners, LLC, a Missouri limited liability company and 10901 Olive Partners, LLC, a Missouri limited liability company, or any person, persons, firm or corporation to whom it transfers its rights hereunder prior to the time when all Units in the Condominium have been sold.

1.11. Declaration – This instrument (including all Exhibits attached hereto) and any amendments hereto which may recorded from time to time.

1.12. ECR Agreement – The Easement, Covenants and Restrictions Agreement dated August 13, 2004, by and between M&I Marshall & Ilsley Bank, and 10923 Olive Partners, L.L.C. as amended by that certain First Amendment to Easement, Covenants and Restrictions Agreement dated August 1, 2006, which is recorded in Book 17374 Page 4633 of the County of St. Louis Records.

1.13. Eligible Mortgage Holder – Each holder, insurer or guarantor of a duly recorded first mortgage or deed of trust on the Units which has made written request to the Board for notice of all matters of which holders, insurers or guarantors are entitled pursuant to the provisions of this Declaration, the Act or the Bylaws.

1.14. Land – The real property described in the above recitals.

1.15. Limited Common Elements – Any Common Element that benefits one but less than all of the Units or any portion of the Condominium that is identified on the Plat as a Limited Common Element.

1.16. Percentage of Ownership – Each Unit Owner's undivided interest in the Common Elements as described in Article III.

1.17. Person – Any natural person, partnership, limited liability company, corporation, trustee or other legal entity capable of holding title to real property.

1.18. Plat – Those certain drawings attached hereto as Exhibit B for the Condominium, which were prepared by Grimes Consulting, Inc., and recorded in the County of St. Louis Records, which contain the information required by the Act, as may be amended from time to time.

1.19. Property – The Land, together with all improvements and structures from time to time located thereon, including all appurtenances thereto and all easements and rights intended for the mutual use, benefit or enjoyment of the Unit Owners.

1.20. Revised Plat – Any Plat which may be recorded against the Property in accordance with Section 14.2 below.

1.21. Rules and Regulations – The rules and regulations as may be published by the Board from time to time.

1.22. State – The state of Missouri.

1.23. Unit 1 – A physical portion of the Condominium designated for separate ownership or occupancy as identified and the boundaries of which are delineated on the Plat, without regard to any future subdivision of the same, and further described below.

1.24. Unit 1 Owner – The person or persons, individually or collectively, having fee simple ownership in Unit 1.

1.25. Unit 2 – A physical portion of the Condominium designated for separate ownership or occupancy as identified and the boundaries of which are delineated on the Plat, without regard to any future subdivision of the same, and further described below.

1.26. Unit 2 Owner – The person or persons, individually or collectively, having fee simple ownership in Unit 2.

1.27. Unit Owners – Collectively the Unit 1 Owner and the Unit 2 Owner.

1.28. Units – Collectively, Unit 1 and Unit 2, and individually, either one of them.

1.29. Utility Services – Collectively, but without limitation, water, sanitary and storm water sewers, telephone, power, electricity, natural gas, cable television, internet and other utility services.

ARTICLE II
Description of the Units

2.1. Unit 1

(a) The location of Unit 1 is shown on the Plat and shall be identified as "Unit 1" in every deed, lease, mortgage or other instrument, and as provided in the Act, such descriptions shall be deemed good and sufficient for all purposes.

(b) The boundaries of Unit 1 are as designated on the Plat.

(c) Unit 1 Owner shall have all rights assigned to it under the ECR Agreement and any Limited Common Elements assigned to it.

2.2. Unit 2

(a) The location of Unit 2 is shown on the Plat and shall be identified as "Unit 2" in every deed, lease, mortgage or other instrument, and as provided in the Act, such descriptions shall be deemed good and sufficient for all purposes.

(b) The boundaries of Unit 2 are as designated on the Plat.

(c) The Unit 2 Owner shall have all rights assigned to it under the ECR Agreement and any Limited Common Elements assigned to it.

ARTICLE III
Ownership of Common Elements

3.1. Percentage of Ownership in Common Elements. No Unit Owner shall own any Common Elements, except to the extent of its Percentage of Ownership. Each Unit Owner shall have an undivided interest in the Common Elements, as set forth in Exhibit C. The Percentages of Ownership have been computed and determined in accordance with the provisions of the Act, and are based upon the ratio that the square footage of a Unit bears to the aggregate square footage of all Units included in the Condominium. The Percentage of Ownership shall not be amended, increased or decreased, except by a unanimous vote of the Unit Owners. Notwithstanding the foregoing, any Unit Owner may subdivide its Unit and respective Percent of Ownership without approval from the other Unit Owners, provided that, notwithstanding any subsequent partition or division of a Unit, on one or more occasions, the individual Percentage of Ownership for said Unit as a whole shall remain the same interest corresponding to said Unit as existed prior to such partition or division. Notwithstanding the respective Percentage of Ownership that a Unit Owner has in the Common Elements, each Unit Owner's share of liability for Common Expenses shall be as set forth in Exhibit C.

3.2. No Partition of Common Elements. As long as the Property is subject to the provisions of the Act, the Common Elements shall remain undivided, and no Unit Owner shall bring any action for partition or division of the Common Elements.

3.3. No Severance of Ownership. The ownership of each Unit and of such Unit Owner's corresponding Percentage of Ownership in the Common Elements shall not be separated, and any purported conveyance, encumbrance, judicial sale or other voluntary of involuntary transfer of an undivided interest in the Common Elements made without the Unit to which that interest is allocated shall be void. Any conveyance, transfer or encumbrance of a Unit shall be deemed to convey, transfer and encumber the Unit Owner's corresponding Percentage of Ownership in the Common Elements even though not expressly mentioned or described or expressly omitted or excepted.

3.4. Limited Common Elements. Any portion of any chute, flue, duct, wire, conduit, bearing wall, bearing column or any other fixture lying partially within and partially outside a Unit which serves only such Unit shall constitute a Limited Common Element allocated solely to that Unit, and any portion thereof serving more than one Unit or any portion of the Common Elements shall constitute a part of the Common Elements. There may be additional Limited Common Elements appurtenant to Units as specifically designated and delineated on the Plat. The Limited Common Elements are reserved for the use of the Units to which they are appurtenant or assigned to the exclusion of other Units, and there shall pass with a Unit as an appurtenance thereto the exclusive right to use the Limited Common Elements so appurtenant or assigned. Any Limited Common Expenses, not expressly required to be maintained by a Unit Owner pursuant to this Declaration, shall be treated and paid for as a part of the Common Expenses of the Association, but shall be assessed against the individual Unit Owner and Unit to which such Limited Common Element is appurtenant or assigned. Notwithstanding anything to the contrary contained herein,

the Unit 1 Owner shall be solely responsible for the maintenance, repair and replacement of the drive-thru canopy and all appurtenances thereto identified as a Limited Common Element for the benefit of Unit 1 on the Plat.

ARTICLE IV
Uses and Restrictions

4.1. Common Elements.

(a) Uses.

(i) Except as provided in Section 4.1(b), each Unit Owner shall have the right to the use of the Common Elements and any equipment contained therein in common with all other Unit Owners as may be required for the purposes for which such Common Elements are intended.

(ii) The foregoing rights to use the Common Elements shall extend to each Unit Owner, and the guests and other authorized occupants and visitors of each Unit Owner, and such rights shall be subject to and governed by the provisions of the Act, this Declaration, the Bylaws and any rules and regulations established by the Association. Each Unit Owner shall be deemed to have an easement, in common with the other Unit Owners, in, upon, across, over, through and with respect to the Common Elements to the extent of such right to use the Common Elements.

(b) Restrictions. No person shall use the Common Elements or the Limited Common Elements, if any, in any manner which does not conform to the Rules and Regulations or the ECR Agreement.

4.2. Unit Use and Restrictions.

(a) The Units shall be used for commercial and retail uses, including, without limitation, banking and financial services, restaurants, and/or office uses, as permitted under the Ordinances of the City of Creve Coeur, Missouri, as now or hereafter in effect.

(b) The Units shall be maintained in a clean and sanitary condition. Garbage, trash and rubbish shall be placed only in those portions of the Condominium as may be designated on the Plat or in such other areas designated for such purpose by the Board.

(c) The Units shall not be used, occupied or kept in a manner that in any way increases the fire insurance premiums for the Common Elements, Limited Common Elements or other Units without the prior written permission of the Board.

(d) Each Unit Owner shall be responsible for maintaining its respective Unit in good order and repair, at the expense of such Unit Owner.

(e) Each Unit Owner shall be responsible for the cleanliness of Limited Common Elements serving such Unit, if any, all at the expense of such Unit Owner.

ARTICLE V
Common Expenses

5.1. Common Expenses

(a) Each Unit Owner's portion of Common Expenses shall be as set forth in Exhibit C; provided however, all cost and expenses for the operation, maintenance, repair and replacement of the Common Areas pursuant to the ECR Agreement shall continue to be apportioned to the Unit Owners in accordance with the ECR Agreement.

(b) Until the Declarant or the Association, by a vote of the Board, levies a Common Expense assessment, Declarant shall pay all accrued Common Expenses of the Condominium. Thereafter, each Unit Owner shall be severally liable for the Common Expenses that are levied against his Unit while a Unit Owner.

5.2. Assessments for Common Expenses

(a) Simultaneously herewith for the first calendar year of the Association and thereafter each year, on or before December 15, the members of the Board shall prepare a budget by estimating the total amount of money necessary to pay the cost of wages, materials, insurance, repairs, services, supplies and any other work which will be required during the ensuing fiscal year for the rendering of all services and the performance of all the powers and duties of the Board, together with a reasonable amount considered by the Board to be necessary for a reserve for contingencies and replacements. After the preparation and adoption of each such budget, the Board shall submit such proposed budget to the Unit Owners for review and approval. The Board shall set a date for a meeting of the Unit Owners to consider ratification of the proposed budget. Said meeting shall be held no less than fourteen (14) days nor more than thirty (30) days after mailing the budget to the Unit Owners. Unless either Unit Owner rejects the budget at said meeting, the budget shall be deemed ratified, whether or not a quorum is present. In the event the proposed budget is rejected by one or more of the Unit Owners, the budget from the previous year, increased by (i) five percent (5%) of expenses within the control of the Board and (ii) the actual amount of any Common Expenses incurred which are not within the control of the Board, including, without limitation, utilities, taxes, insurance and snow/ice removal. Such adjusted budget shall be established as the new budget for the upcoming year, unless or until all of the Unit Owners agree otherwise. After the budget is ratified, or otherwise established, the Board shall give each Unit Owner notice of the assessment against that Unit Owner based upon the new budget. The assessment allocated against each Unit Owner shall be consistent with the allocations set forth in Exhibit C. The assessment shall be deemed levied upon the giving of such notice. On or before the first day of each month, each Unit Owner shall be obligated to pay the Board, or as it may direct, one-twelfth ($1/12^{th}$) of the annual assessment. At the end of each fiscal year, the Board shall supply to all Unit Owners an itemized accounting of the maintenance expenses of the preceding fiscal year, amounts actually collected pursuant to the budget, and showing the net amount over or short of the actual expenditures plus reserves.

(b) The Board shall build up and maintain a reasonable reserve for contingencies and replacements. Extraordinary expenditures and replacements, which are originally included in the annual budget and may become necessary during the year, shall be charged first against such reserve. If said budget proves inadequate for any reason, then the Board shall notify the Unit Owners in writing of the amount of and reasons for such deficiency and the budget and the monthly assessments for the remainder of the year shall be adjusted accordingly with each Unit Owner being responsible for its proportionate share of the deficiency.

(c) In the event the Board is in dispute over the estimated amounts necessary for the Common Expenses or the reserves which prevents the Board from successfully preparing and adopting a budget for ratification by the Unit Owners, then said dispute shall be resolved by binding arbitration.

(d) If any Unit Owner fails or refuses to pay any sums assessed by the Board for Common Expenses and said payments remain delinquent for thirty (30) days, the amount due, together with a late charge of five percent (5%) per month, shall constitute a lien on such Unit Owner's Unit prior to all other liens and encumbrances, recorded or unrecorded, except only (i) taxes, special assessments and special taxes theretofore or thereafter levied by a political subdivision or municipal corporation of the State and other state or federal taxes which by law are a lien on the interest of such Unit Owner prior to pre-existing recorded encumbrances thereon, (ii) encumbrances on the interest of such Unit Owner recorded prior to the date such notice is recorded which by law would be a lien thereon prior to subsequently recorded encumbrances (excepting, however, up to six months of any such delinquent assessments which shall have priority over the lien of any first priority mortgage or deed of trust as provided in Section 448.3-116.2(3) of the Act), and (iii) such other items enumerated in Section 448.3-116 of the Act. Any encumbrancer whose lien is junior to the lien of the assessments herein provided may from time to time request in writing a written statement from the Board setting forth the unpaid assessments with respect to the Unit covered by its encumbrance, and unless such written statement is provided within thirty (30) days, all unpaid Common Expenses which become due prior to the date of the making of such request but after the date of the preceding request, if any, made by such encumbrancer, shall be subordinate to the lien of such encumbrance.

(e) The lien to secure payment of assessments shall be in favor of the Board and their successors in office and shall be for the benefit of all other Unit Owners, and may be foreclosed by an action brought in the name of the Board in like manner as a mortgage of real property, as provided in Sections 433.190-443.310 of the Missouri Revised Statutes.

(f) A suit to recover unpaid assessments, plus interest and late charges, may be brought by the Board without foreclosing or waiving the lien securing it.

(g) No Unit Owner may waive or otherwise escape liability for assessments provided for herein by non-use of the Common Elements or abandonment of such Unit.

(h) When ownership of a Unit is transferred by foreclosure under the remedies provided in any first deed of trust, except to the extent provided in Section 448.3-116 of

the Act, the lien of any unpaid assessments as to the Unit shall abate. The Unit and Unit Owner acquiring title under the remedies provided in a first deed of trust shall be subject only to the lien for up to six months delinquent assessments as provided in Section 448.3-116.2(3) of the Act and for assessments which become due after such transfer of title. Nothing in this paragraph shall be construed as a waiver or release of the obligation of the former owner to pay the delinquent assessments.

(i) The failure of the Board to prepare or delay of the Board in preparing any budget, and to levy or in levying assessments, shall not constitute a waiver or release of the Unit Owners' obligation to pay assessments whenever the same shall be determined and levied by the Board. Until a new assessment is levied by the Board, each Unit Owner shall continue to pay the assessment levied the previous year, as adjusted pursuant to Section 5.2(a) above, at the same periodic times levied, or as the Board may otherwise advise in writing. Also, any deficiencies or inadequacies in the procedure followed by the Board in levying an assessment shall not in any way affects its validity or the obligation of Unit Owners to pay such assessments.

(j) The Board shall keep full and correct books of account and the same shall be open for inspection by any Unit Owner or any representative of a Unit Owner or any mortgagee thereof duly authorized in writing, at such reasonable times or times during normal business hours as may be requested by the Unit Owner.

ARTICLE VI
Association of Unit Owners

6.1. Association

(a) The Association shall be the governing body of all of the Unit Owners for (i) the maintenance, repair, and replacement of the Common Elements and Limited Common Elements, as further set forth in Article XI, and (ii) for the administration and operation of all matters related to the Common Elements and Limited Common Elements.

(b) Each Unit Owner shall be a member of the Association, and such membership shall be nontransferable and shall automatically terminate when the person ceases to be a Unit Owner. Upon transfer of a Unit Owner's ownership interest in its Unit, the Person succeeding to such ownership interest shall automatically succeed to such membership in the Association.

(c) The aggregate number of votes for Unit Owners shall be one hundred (100), which shall be divided among the respective Unit Owners in accordance with their Percentage of Ownership. If any Unit Owner consists of more than one Person, the voting rights of such Unit Owner shall not be divided but shall be exercised as if the Unit Owner consisted of only one Peron in accordance with the proxy or other designation made by the Persons constituting such Unit Owner.

6.2. Board.

(a) The Association shall be managed by the Board.

(b) The Board shall consist of three (3) members. The Unit 2 Owner shall have the right to appoint and remove one (1) such member, and the Unit 1 Owner shall have the right to appoint and remove two (2) members of the Board.

6.3. Liability. Notwithstanding the duty of the Association to maintain, manage, operate, repair and replace parts of the Property, the Association shall not be liable for any act, omission, injury or damage, except that which is due to the willful or grossly negligent conduct of the Association.

6.4. Powers of the Association. To the extent not limited or denied in this Declaration, the Association shall have all powers permitted under the Missouri Nonprofit Corporations Law and the Act including, without limitation, the power to do the following:

(a) Adopt and amend By-Laws, Rules and Regulations.

(b) Adopt and amend budgets for revenues, expenditures and reserves, and to collect assessments for Common Expenses from Unit Owners.

(c) Hire and terminate managing agents and other employees, agents and independent contractors.

(d) Institute, defend or intervene in litigation or administrative proceedings in its own name on behalf of itself or two or more Unit Owners on matters affecting the Condominium.

(e) Make contracts and incur liabilities including, without limitation, contracts for the repair and maintenance of the Common Elements and/or Limited Common Elements and day-to-day administration of the Association.

(f) Regulate the use, maintenance, repair, replacement and modification of the Common Elements and/or Limited Common Elements.

(g) Cause additional improvements to be made as part of the Common Elements and/or Limited Common Elements

(h) Acquire, hold, encumber and convey in its own name or in the name of any trustee of nominee, any right, title or interest to real or personal property; provided that the Common Elements and/or Limited Common Elements may be conveyed or subjected to a security interest only pursuant to this Declaration and Section 448.3-112 of the Act.

(i) Grant easements, leases, licenses and concessions through and over the Common Elements and/or Limited Common Elements

(j) Impose and receive any payments, fees or charges for the use, rental and operation of the Common Elements, Limited Common Elements and services provided to Unit Owners.

(k) Impose charges for late payment of assessments, and after notice and an opportunity to be heard, levy reasonable fines for violation of the Declaration, By-Laws and Rules and Regulations.

(l) Impose reasonable charges for the preparation and recordation of amendments to the Declaration or statements of unpaid assessments.

(m) Provide for the indemnification of its officers and Board and maintain directors and officers liability insurance.

(n) Assign its rights to future income including the right to receive assessments.

(o) Exercise any other powers necessary and proper for the management and operation of the Association and not expressly prohibited by the Act or this Declaration.

ARTICLE VII
Separate Mortgages

7.1. Separate Mortgages. Each Unit Owner shall have the right to make a separate mortgage or encumbrance on the Unit Owner's respective Unit together with the Unit Owner's respective ownership interest in the Common Elements and Limited Common Elements. No Unit Owner shall have the right or authority to make or create or cause to be made or created any mortgage or encumbrance or other lien on or affecting the Property or any part thereof, except only to the extent of the Unit Owner's own Unit and the Unit Owner's respective ownership interest in the Common Elements and Limited Common Elements.

7.2. Notice to Eligible Mortgage Holder. Each Eligible Mortgage Holder shall be given a copy of any and all notices permitted or required by this Declaration to be given to the Unit Owner whose Unit is subject to such Eligible Mortgage Holder's mortgage or deed of trust.

7.3. Default in Payment under Mortgage or Deed of Trust. In the event a Unit Owner shall default in the payment of any monies required to be paid under the provisions of any mortgage or deed of trust against said Unit, the Association shall have the right to cure such default (in accordance with the provisions of, and during the time period provided in, such mortgage or deed of trust) by paying the amount so owing to the party entitled thereto and shall thereupon have a lien therefor against the defaulting Unit, which lien may be perfected and foreclosed in the manner provided in Section 448.3-116 of the Act with respect to liens for failure to pay a share of the Common Expenses. In the event the Association does not elect to cure such default, the lien holder may proceed to foreclose such lien and sell the property in accordance with the mortgage or deed of trust. Nothing herein contained shall be construed to require the Eligible Mortgage Holder to furnish notice of default under said mortgage or deed of trust to the Association.

7.4. Possession by Eligible Mortgage Holder. Each holder of a first mortgage or deed of trust on a Unit who comes into possession of the Unit by virtue of foreclosure of such mortgage

or deed of trust, or by deed or assignment in lieu of foreclosure, or any purchaser at a foreclosure sale, will, except as provided in Sections 5.2(d) and 5.2(h) above, take the Unit free of any claims for unpaid assessments and charges against the Unit which accrue prior to the time such holder or purchaser comes into possession of the Unit if such holder's mortgage or deed of trust, or the mortgage or deed of trust so foreclosed, was properly recorded prior to the date of the recording of the notice of delinquency with respect to such assessments.

ARTICLE VIII
Taxes & Assessments

8.1. Real Estate Taxes. The real estate taxes on each Unit are to be separately paid by each Unit Owner as provided in the Act.

8.2. Separate Tax Bills. If, for any reason, the tax bills are not separately issued by the taxing authorities, then each Unit Owner shall pay the Unit Owner's individual share of the taxes as determined by the Association in accordance with the Unit Owner's Percentage of Ownership.

ARTICLE IX
Utilities

9.1. Separate Meter; Unit Owner's Responsibility. Unless the Unit Owners agree otherwise in writing, the Unit Owners shall have their utilities, such as telephone, electricity, water, gas, cable television and other utilities, separately metered and shall pay the respective utility company for such services.

9.2. Utility Service. All utilities are hereby granted the right to lay, construct, renew, alter, remove, operate and maintain conduits, cables, pipes, wires, transformers, switching apparatus and other equipment into and through the Common Elements for the purpose of providing Utility Services to the Property or any Unit. The Board may hereafter grant additional utility easements for the benefit of the Property over, under, along and on any portion of the Common Elements, and each Unit Owner hereby grants to the Board an irrevocable power of attorney to execute, acknowledge, register and record for and in the name of all Unit Owners, such instruments as may be necessary to effectuate the foregoing.

ARTICLE X
Insurance

10.1. Association's Insurance. Commencing not later than the time of conveyance of the first Unit to a Person other than the Declarant, the Association shall maintain to the extent reasonably available the insurance required by Section 448.3-113 of the Act and the insurance hereinbelow described in this Article X. The premiums for such insurance shall be a Common Expense.

10.2. Property Insurance. The Association shall obtain insurance for the Property against loss or damage by fire and such other hazards as the Association may deem advisable for the full insurable replacement cost of the Common Elements and Limited Common Elements; provided, however, such insurance shall provide protection against loss or damage by fire and other perils normally covered by the standard extended coverage endorsement and against all other perils

which are customarily covered with respect to projects similar in construction, location and use as the Property, including, without limitation, earthquake, ordinance and law and all perils normally covered by the standard "all risk" endorsement. If available at reasonable cost, the policies obtained by the Association shall also have agreed-amount and inflation guard endorsements. Such insurance coverage shall be written in the name of, and the proceeds thereof shall be payable to, the Association or the Board, as the trustee for each of the Unit Owners, and also as trustee for each such Unit Owner's mortgagee(s), if any, in their respective Percentages of Ownership. Any insurance proceeds so paid to the Board or the Association which are disbursed for reconstruction of damaged premises shall be disbursed by a title insurance company or other escrow agent selected by the Association (or the Board) pursuant to an agreement between the Association (or the Board) and such agent, providing appropriate mechanic's lien protection. Application of the insurance proceeds to reconstruction, and disposition of the Property where the insurance proceeds are insufficient for reconstruction, shall be as provided in the Act. In the event of damage or destruction of any Unit or Units, the insurance proceeds shall be used in accordance with the provisions of Section 448.3-113.8 of the Act.

10.3. Comprehensive General Liability Insurance. The Association shall also obtain comprehensive general liability insurance, including medical payments insurance, in such limits as it shall deem desirable, and workmen's compensation insurance and other insurance as it may deem desirable, insuring each Unit Owner and the Association, Board and manager(s) and managing agent(s) from liability in connection with the Common Elements. Notwithstanding anything set forth above, the liability coverage shall be in the minimum amount of $1,000,000.00 per occurrence for bodily injury and property damage, and coverage shall include, without limitation, legal liability of the insureds for property damage, bodily injuries and deaths of persons in connection with the operation, maintenance or use of the Common Elements.

10.4. Insurance Policies. Insurance policies carried pursuant to Sections 10.2 and 10.3 shall provide that:

(a) Each Unit Owner is an insured person under the policy with respect to liability arising out of Unit Owner's interest in the Common Elements;

(b) The insurer waives its rights to subrogation under the policy against any Unit Owner;

(c) No act or omission by any Unit Owner, unless acting within the scope of Unit Owner's authority on behalf of the Association will void the policy or be a condition to recovery under the policy; and

(d) If, at the time of a loss under the policy, there is other insurance in the name of a Unit Owner covering the same risk covered by the policy, the Association's policy provides primary insurance.

10.5. Unit Owner's Insurance. Each Unit Owner may, at its own cost and expense, obtain insurance (a) for its Unit, and any additions and improvements thereto, and the decorating, furnishings and personal property therein, and (b) on the Unit Owner's personal liability to the extent not covered by the liability insurance obtained by the Association as provided in Section

10.3 above. Notwithstanding the foregoing, if at any time there is other insurance in the name of a Unit Owner covering the same risk covered by the Association's policy, the Association's policy shall provide primary insurance.

10.6. Flood Insurance. If the Property is at any time located within an area having special flood hazards and for which flood insurance has been made available under the National Flood Insurance Program (the "NFIP"), the Board shall obtain a master or blanket policy of flood insurance on the Property in an amount not less than the lesser of (a) the maximum coverage available under the NFIP for all buildings and other insurable property within the Property, and (b) 100% of the current replacement cost of all such buildings and other insurable property.

10.7. Additional Insureds. Notwithstanding any of the foregoing provisions and requirements relating to property or liability insurance, if permitted by law, the Board may name as an insured under the property and liability insurance policies, on behalf of the Association, the Association's authorized representative (including any trustee with whom the Association may enter into any insurance trust agreement or any successor to such trustee) who shall have exclusive authority to negotiate losses under any policy providing such property or liability insurance. Each Unit Owner, by acceptance of a deed from the Declarant or any other Unit Owner to any Unit, hereby appoints the Association or such representative or trustee as attorney-in-fact for the purpose of purchasing or maintaining such insurance, including the collection and appropriate disposition of the proceeds thereof, negotiation of losses and execution of releases of liability, the execution of all documents and the performance of all other acts necessary to accomplish such purpose. The Association or any such representative or any such trustee, shall receive, hold or otherwise properly dispose of any proceeds of insurance in trust for the Unit Owners and their mortgage holders, as their interests may appear.

10.8. Blanket Fidelity Bond. The Association, may at its election, obtain a blanket fidelity bond covering all officers, directors and employees of the Association and all other persons handling or responsible for funds of or administered by the Association. The total amount of fidelity bond coverage shall not be less than the estimated maximum of funds, including reserve funds, in the custody of the Association or the managing agents of the Association at any given time; provided, however, that in no event shall the aggregate amount of such bond(s) be less than a sum equal to three months' aggregate assessments on the Units plus any reserve funds held by the Association. Such fidelity bond(s) shall also meet the following requirements:

(a) It shall name the Association and the Unit Owners as co-obligees;

(b) It shall contain waivers by the issuers of the bond of all defenses based upon the exclusion of persons serving without compensation from the definition of "employee", or similar terms or expressions;

(c) The premiums on the bond (except for premiums on fidelity bonds maintained by a management agent for its officers, employees and agents) shall be paid by the Association as a Common Expense; and

(d) The bond shall provide that it may not be canceled or substantially modified (including cancellation for non-payment of premium) without at least thirty (30) days prior

written notice to the Association and to each holder of a first mortgage or deed of trust which is listed in the bond as a scheduled holder of a first mortgage or deed of trust.

10.9. Indemnification Obligations. The Association may obtain, to the extent available, insurance to satisfy indemnification obligations of the Board, the Association and all Unit Owners, including, without limitation, insurance coverage commonly referred to as "Directors and Officers Insurance." The premiums for such insurance shall be paid by the Association as a Common Expense.

10.10. Certificates of Insurance. All insurance obtained pursuant to this Article X shall provide that any insurer who has issued an insurance policy under this Article shall issue certificates or memoranda of insurance to the Association and, upon written request, to any Unit Owner or Eligible Mortgage Holder. No insurer issuing a policy may cancel, substantially modify, or refuse to renew it until thirty (30) days after notice of the proposed cancellation, modification or non-renewal has been mailed to the Association, each Unit Owner and each Eligible Mortgage Holder or beneficiary under a deed of trust to whom a certificate or memorandum of insurance has been issued at their respective last known addresses.

ARTICLE XI
Maintenance, Repair & Replacement

11.1. Responsibility of the Association. The management, maintenance, repairs and replacements of the Common Elements and the Limited Common Elements, if any, shall be the responsibility of the Association, and the cost thereof shall be a Common Expense. The Association shall act as the "Developer" and shall be responsible for the operation, maintenance, repair and replacement of the Common Areas pursuant to the ECR Agreement and shall apportion all such cost and expenses to the Unit Owners in accordance with the ECR Agreement. The Association may use any of the money received by it for any purpose relating to the foregoing, and as hereinafter provided. All damages caused to a Unit or any Limited Common Element by any work on or to the Common Elements done by or for the Association shall be repaired by the Association, and the cost thereof shall be a Common Expense. All costs and expenses of maintaining, operating, repairing and replacing any Limited Common Elements shall be borne by and as provided in Article III, Section 3.4 above, assessed against the Owner of the Unit to which such Limited Common Elements are allocated.

11.2. Responsibility of the Units. The management, maintenance, repairs, alterations and improvements of the Units and the improvements located therein (excluding any Common Elements or Limited Common Elements) shall be the sole responsibility of the respective Unit Owners. Without limiting the generality of the foregoing, the Unit Owners shall maintain, repair and replace, at their own cost and expense, all portions of their respective Units including, without limitation, air conditioning and heating equipment, hot water heaters and all other appliances and equipment (including any facility and connections required to provide Utility Service to the Unit and no other); the interior surfaces of perimeter walls, interior walls, ceilings and floors; and all windows and plate glass installations (including glass doors) forming a portion of the perimeter of the Unit. Each Unit Owner shall regularly inspect its Unit for damage requiring maintenance or repair and promptly make repairs as needed.

11.3. Access for Maintenance, Repair and Replacement. The authorized representatives of the Association, the Board, or of the manager or managing agent for the Common Elements and Limited Common Elements shall be entitled to reasonable access to the Units as may be required in connection with inspection of and maintenance, repairs, or replacements of or to the Common Elements or Limited Common Elements or equipment, facilities or fixtures affecting or serving the Common Elements or Limited Common Elements. Access through the Units shall be at reasonable times of the day with notice to the Unit Owner, unless access is necessary due to an emergency and shall be subject to all reasonable rules and regulations of such Unit Owner (it being acknowledge that any entry into the Building on Unit 1 will be subject to all such rules and regulations as promulgated or affecting the operations of the financial institution operating in the Building on Unit 1).

11.4. Damage to and Repair of Common Elements, Limited Common Elements and Units.

(a) If, due to a negligent act or omission of a Unit Owner or a Unit Owner's employee, contractor, subcontractor, supplier, agent, guest, visitor, invitee or licensee, damage shall be caused to the Common Elements, and maintenance, repairs or replacements shall be required which would otherwise be a Common Expense, then such Unit Owner shall pay for such damage and such maintenance, repairs and replacements, as may be determined by the Association.

(b) If, due to a negligent act or omission of a Unit Owner or Unit Owner's employee, contractor, subcontractor, supplier, agent, guest, visitor, invitee or licensee, damage shall be caused to any other Unit, then said Unit Owner shall pay for such damage and such maintenance, repairs and replacements, as may be determined by the Unit Owner of the damaged Unit.

11.5. Maintenance, Repairs and Replacements Subject to Rules and Regulations. Maintenance, repairs and replacements to the Units, the Common Elements, the Limited Common Elements or any other improvements thereon shall be subject to the Rules and Regulations.

ARTICLE XII
Alterations, Additions & Improvements

12.1. Structural Integrity, Mechanical or Utility Systems. Unit Owners may not impair structural integrity, mechanical or utility systems or lessen the support of any portion of the Units and may not alter the exterior façade of the Units, except as otherwise set forth in Article XVIII.

12.2. Common Elements. Unit Owners may not change the Common Elements or any Limited Common Elements without prior written consent of the Association, which may be granted, withheld or conditioned in the sole discretion of the Board and, in the case of a Limited Common Element, the consent of the Unit Owner whose Unit is served by the Limited Common Element.

ARTICLE XIII
Remedies

13.1. Governing Documents. All Unit Owners, occupants and Eligible Mortgage Holders shall be governed by and shall comply with the terms, conditions, obligations and provisions of the Act, this Declaration and the Bylaws, as the same may be amended from time to time.

13.2. Default by Unit Owner

(a) A default in or failure to comply with any of the terms, conditions, obligations, and provisions of the Act, this Declaration and the Bylaws, as the same may be amended from time to time, by any Unit Owner or occupant, shall be grounds for relief that may include, without intending to limit the same or to constitute an election for any action or cause of action to enjoin, abate or remedy by appropriate legal proceedings at law or in equity, such default or failure, which relief may be sought by the Association or, if appropriate, by any one or more aggrieved Unit Owners, or both. Also, if any Unit Owner fails to perform any obligation under the Act, this Declaration, the Bylaws, or any Rules and Regulations imposed by the Board, as the same may from time to time be amended, then the Association may, but is not obligated to, perform the same for the Unit Owner, and for such purpose may enter upon his Unit, may make necessary repairs, advance expenses or other sums necessary to cure the default, and for such expenses and costs may levy a special assessment against the Unit owned by such defaulting Unit Owner.

(b) In the event of any such default or failure, the Board shall promptly serve upon or mail to the defaulting Unit Owner, and each Eligible Mortgage Holder of that Unit, a written notice specifying the nature of the default, and cure thereof, and the time within which the cure shall be effected. The defaulting Unit Owner may cure the default within the time specified in the notice or may serve upon or mail notice to the Board requesting a hearing before the Board.

(c) If a defaulting Unit Owner requests a hearing, the Board shall serve upon or furnish to the defaulting Unit Owner and each Eligible Mortgage Holder a notice specifying the time and place for such hearing. At the hearing, the Board shall take such evidence and hear such testimony as it deems necessary or desirable. The Board shall not exercise any remedies to obtain relief from the defaulting Unit Owner until the hearing is over and the Board has made its determination and served upon or mailed the same to the defaulting Unit Owner and each Eligible Mortgage Holder. Upon taking such evidence and hearing such testimony, the Board shall determine in writing, and at its sole option, to: (i) waive the default in whole or in part, (ii) extend the time within which the default may be cured, or (iii) levy a fine or penalty.

(d) If the defaulting Unit Owner (i) does not cure the default or request a hearing within the time limit specified in the original notice of default, or (ii) so requests a hearing, but fails to cure the default (to the extent not waived by the Board) within the extended time, if any, granted by the Board after the hearing, then the Board shall serve upon or mail to the defaulting Unit Owner and each Eligible Mortgage Holder a written

notice of such Unit Owner's failure to effect the cure, and the Board may proceed to take such action as it deems necessary to obtain relief.

(e) Upon an event of default, the Association and the Board shall have each and all of the rights and remedies which may be provided for in the Act, this Declaration, and the Bylaws, or which may be available at law or in equity. Notwithstanding the foregoing, enforcement of assessment liens shall be governed by Article V and not pursuant to this Section 13.2.

(f) In the event a Unit Owner fails to effect the cure specified by the Board in the notice of default, within the time specified in such notice, where the default is a structure, thing, or condition existing in or on the premises of the Unit Owner's Unit, the Board, or its duly authorized representative, shall have the right to enter upon the premises of the Unit Owner's Unit in which, on which, or as to which, such default exists, and summarily to abate and remove, at the defaulting Unit Owner's expense (and levy an assessment therefor), the structure, thing, or condition constituting the default, and the Board, the Association, and their agents, employees, and representatives shall not thereby be deemed guilty of any manner of trespass.

13.3. Recovery of Costs. In any proceeding arising because of an alleged default by a Unit Owner, the prevailing party shall be entitled to recover the costs of such proceeding and such reasonable attorneys' fees as may be allowed by the court, with interest thereon at twelve percent (12%) per annum from the dates such costs are incurred until paid.

13.4. Failure to Enforce. The failure of the Association or of any Unit Owner thereof to enforce any term, provision, rights, covenant, or condition that may be granted by the Act, this Declaration and the Bylaws, as the same may from time to time be amended, shall not constitute a waiver or abrogation of the right of the Association or a Unit Owner or the Board to enforce such term, provision, right, covenant, or condition in the future, irrespective of the number of violations or breaches thereof that may have occurred.

ARTICLE XIV
Amendment to Declaration; Subdivision; Revised Plat

14.1. Amendments.

(a) All provisions may be amended from time to time upon the approval of such amendment or amendments pursuant to a resolution or written consent (given in accordance with the Bylaws) adopted or given by the Unit Owners in accordance with the Bylaws; provided, however, no further use or occupancy restrictions shall be imposed upon either Unit without the written consent of the applicable Owner, which consent shall not be unreasonably withheld, delayed or conditioned.

(b) All amendments to this Declaration made pursuant to Section 14.1(a) shall be prepared, executed, and certified on behalf of the Association by any officer or officers of the Association designated for that purpose in the amendment, or in the absence of designation, by the President of the Association.

14.2. Subdivision. Notwithstanding anything to the contrary set forth in this Declaration, the Declarant or a subsequent Unit Owner, in its sole discretion, reserves the right to subdivide any Unit into multiple units; provided, however, any such subdivision shall result in a newly created condominium which shall be governed by its own condominium plat and declaration and shall not result in a modification to this Declaration. The association of the newly created condominium shall be deemed the member of the Association, and the votes attributed to the subdivided Unit shall be vested in and may be exercised only by the newly created association and not the individual unit owners of the newly created condominium.

ARTICLE XV
Notices

15.1. Addresses. Any notice, demand, request, consent, approval or other communication provided for in the Act, Declaration or Bylaws, or desired to be given shall be in writing, and shall be addressed, as the case may be, to:

Association:	c/o Hutkin Properties Group, L.L.C. 10829 Olive Boulevard, Suite 200 Creve Coeur, MO 63141 Attn: David Hutkin
Unit Owner:	At the address of the Unit, or at such other address as is hereinafter provided.

15.2. Change of Address. The Association and Declarant may designate a different address or addresses for notices to it by giving written notice of such change of address to the other of the two of them and to all Unit Owners at such time. Either Unit Owner may also designate a different address or addresses for notices to that Unit Owner by giving written notice of his change of address to the Association and the Declarant.

15.3. Means of Notice. Notices addressed as above shall be deemed given (i) when delivered in person; (ii) two (2) business days following the date sent by postage prepaid registered or certified mail, return receipt requested; or (iii) one (1) business day after sent via a recognized commercial delivery service for next day delivery.

ARTICLE XVI
Severability

If any provision of this Declaration or any section, sentence, clause, phrase or word, or the application thereof in any circumstances, is held invalid, the validity of the remainder of this Declaration and of the application of any such provision, section, sentence, clause, phrase or word in any other circumstances shall not be affected thereby.

ARTICLE XVII
Estoppel Certificates

The Association and each Owner shall, within ten (10) days after receiving written request from the Association or any Owner, execute, acknowledge and deliver to and in favor of the

Association or requesting Owner or proposed lender or purchaser of a requesting Owner's Unit an estoppel certificate, in form reasonably satisfactory to the requesting Owner or such lender or purchaser, stating, without limitation:

(a) that the Declaration is in full force and effect and the dates of all amendments, if any, to the Declaration and to the By-Laws with copies thereof attached; and

(b) any sums which are then due and owing by the requesting Owner to the Association or to the Owner executing such certificate, as applicable.

The requesting Owner and any such proposed lender or purchaser may rely upon the accuracy and completeness of the information set forth in such estoppel certificate.

ARTICLE XVIII
Rights & Obligations

18.1. Covenants Running with the Land. The rights and obligations of the respective Unit Owners under this Declaration shall be deemed to be covenants running with the land, so long as the Property remains subject to the provisions of the Act, and shall inure to the benefit of and be binding upon each and all of the respective Unit Owners and their respective heirs, executors, administrators, legal and personal representatives, successors, assigns, purchasers, lessees, grantees, mortgagees, and others having or claiming an interest in the Property, subject to the provisions of the Act and this Declaration.

18.2. Acceptance of Covenants. Each Unit Owner, by acceptance of a deed to any Unit from the Declarant or any other Unit Owner, shall be deemed to have accepted and agreed to be bound by and subject to each and all of the provisions of the Act and this Declaration and the Bylaws.

ARTICLE XIX
Construction Within a Unit

19.1. Construction of Improvements within a Unit.

(a) If either Unit Owner shall at any time perform any construction upon its Unit, said construction shall be performed at said Unit Owner's own cost and expense. Any construction performed by a Unit Owner is subject to the conditions set forth below.

(i) The Unit Owner shall execute such undertaking in a matter which is compliant with applicable codes, regulations and law.

(ii) The Unit Owner shall avoid interference with the other Units and each user, licensee or tenant thereof. During the construction, the other Unit Owners, and their respective users, tenants and licensees, shall be physically able to remain open and operating during the normal business hours of such party and shall have unobstructed pedestrian or vehicular access to their respective Units. In the event any of the work shall obstruct then existing pedestrian or vehicular access

to any portion of any other Unit or is likely to create excessive noise or vibrations, the constructing Unit Owner shall, after providing at least three (3) days prior written notice to the other Unit Owners (except in the event of an emergency, in which case reasonable notice is sufficient), use commercially reasonable efforts to cause the work to be performed during such hours as the affected Unit Owners may reasonably request. In the event the work blocks all or any portion of a tenant's signage, the constructing Unit Owner shall also, at its sole cost and expense, place temporary signage in a form that is reasonably required by the affected Unit Owner or its tenant.

(iii) The constructing Unit Owner shall not, except in case of emergency, enter any other Unit or any tenant space located within any other Unit, without obtaining the prior written consent of the respective Unit Owners, which consent shall not be unreasonably withheld or delayed. The other Unit Owners, however, shall have the right to impose commercially reasonable rules and procedures relating to any work that will require entry into their respective Units or any tenant space located within said Units.

(b) Notwithstanding anything to the contrary set forth herein, the constructing Unit Owner shall (i) provide copies of the plans and specifications for the construction to be performed to the other Unit Owners, including any subsequent modifications or additions to the Unit; and (ii) cause the construction to be performed substantially and materially in accordance with the plans and specifications provided to the Unit Owners.

ARTICLE XX
Easements

20.1. Building. Perpetual, irrevocable, exclusive easements are hereby established in favor of the Association and Unit Owners to use, maintain, repair and replace the Property in the manner provided and contemplated by this Declaration.

20.2. Utility Easements.

(a) Permanent easements are hereby reserved to, through, in and over all portions of the Common Elements, the Limited Common Elements, if any, and all Units, as may be reasonably necessary for the installation, maintenance and repair of utility services, which easements shall run to and be administered by the Association for the benefit of the Declarant and the Unit Owners.

(b) Public utilities furnishing services for common use, such as water, electricity, gas, sewage and telephone, to the Property shall have access to the Common Elements, the Limited Common Elements, if any, and the Units as may be necessary for the installation, repair or maintenance of such services, and any costs incurred in opening or repairing any wall or structural portion of the Units to install, repair or maintain such services shall be a Common Expense and shall be assessed in accordance with this Declaration and the Bylaws. The Board shall have the right to cause the Association to grant other easements and rights in, upon or through the Common Elements and Limited

Common Elements, if any, to permit satellite and cable connections and installations of other facilities for the use and enjoyment of the Unit Owners.

20.3. Encroachments

(a) Permanent easements are hereby declared, in favor of each Unit, for encroachments of any Unit, or the improvements constructed therein, over any other Unit, Common Elements or Limited Common Elements, which now exist or hereafter exist, caused by settlement or movement of the improvements, or caused by minor inaccuracies in building or re-building said improvements, including any variations of the elevations or any variations or tapering of any flaired column capitals, which encroachments shall be permitted to remain undisturbed, and such easements shall continue in favor of all Units until such encroachments no longer exist.

(b) Permanent easements are hereby declared, in favor of the Association and the Common Elements and Limited Common Elements, for encroachments of any Common Element, over any Unit, which now exists or hereafter exists, caused by settlement or movement of the improvements, or caused by minor inaccuracies in building or re-building said improvements, which encroachments shall be permitted to remain undisturbed, and such easements shall continue in favor of the Association and the Common Elements until such encroachment no longer exists.

ARTICLE XXI
Termination

The Condominium may be terminated in the manner provided in Section 448.2-118 of the Act.

ARTICLE XXII
Eminent Domain

22.1. If all or any part of the Property is taken or threatened to be taken by condemnation, eminent domain, or by any other similar power, the Association and each Unit Owner shall be entitled to participate in proceedings incident thereto at their respective expense. The Association shall give notice of the existence of such proceeding to all Unit Owners and to each Eligible Mortgage Holder. The expense of participation in such proceeding by the Association shall be a Common Expense. The Association is specifically authorized to obtain and pay for such assistance from attorneys, appraisers, architects, engineers, expert witnesses, and any other persons as the Association in its discretion deems necessary or advisable to aid or advise in its matters relating to such proceedings. All damages or awards for any such taking shall be deposited with the Association, acting as Trustee, and such damages or awards shall be applied or paid as provided in this Article XXII.

22.2. In the event that an action in eminent domain is brought to condemn a portion of the Common Elements or Limited Common Elements, the Association shall have the sole authority to determine whether to defend any such proceeding; to make any settlement with respect thereto; or to convey such property to the condemning authority in lieu of such condemnation proceeding. With respect to any such taking of the Common Elements or Limited Common Elements, all

damages and awards shall be determined for such taking as a whole and not for each Unit Owner's interest therein. After the damages or awards for such taking are determined, such damages or awards shall be paid to each Unit Owner in proportion to Unit Owner's Percentage of Ownership. The Association may, if it deems advisable, call a meeting of the Association, at which meeting the Unit Owners, by a majority vote, shall decide whether to replace or restore as far as possible the Common Elements or Limited Common Elements so taken or damaged.

22.3. If all or any part of the Units are taken, all damages and awards received for the taking of the Units shall be paid proportionately to the account of the Unit Owners.

22.4. Any damages or awards provided in this Article XXII to be paid to or for the account of any Unit Owner by the Association, acting as Trustee, subject to the provisions of any mortgage or deed of trust affecting such Unit Owner's Unit, shall be applied first to the payment of any taxes or assessments by governmental authorities past due and unpaid with respect to that Unit; secondly, to amounts due under any mortgages or deeds of trust affecting such Unit; thirdly, the payment of any unpaid Common Expense assessments charged to or made against the Unit; and finally, to the Unit Owner.

[SIGNATURE PAGE FOLLOWS]

IN WITNESS WHEREOF, Declarant has executed this Declaration on the date set forth above.

10923 OLIVE PARTNERS, LLC

BY: David S. Hutkin

David S. Hutkin, Manager

STATE OF MISSOURI)
) ss.
COUNTY OF ST. LOUIS)

On this 18th day of DECEMBER, 2024, before me, a Notary Public in and for said state, personally appeared David S. Hutkin, Manager of **10923 Olive Partners, LLC**, a Missouri limited liability company, known to me to be the person who executed the within The 10901 Olive Boulevard Condominium Declaration of Condominium in behalf of said limited liability company and acknowledged to me that he/she executed the same for the purposes therein stated.

IN TESTIMONY WHEREOF, I have hereunto set my hand and affixed my official seal in the County and State aforesaid, the day and year first above written.

Mary M. Knopf

Notary Public

MARY M. KNOPF
Notary Public - Notary Seal
State of Missouri
Commissioned for St. Louis County
My Commission Expires: December 28, 2024
Commission Number: 12409275

IN WITNESS WHEREOF, Declarant has executed this Declaration on the date set forth above.

10901 OLIVE PARTNERS, LLC

BY: David S. Hutkin

David S. Hutkin, Manager

STATE OF MISSOURI)
) ss.
COUNTY OF ST. LOUIS)

On this 18th day of December 2024, before me, a Notary Public in and for said state, personally appeared David S. Hutkin, Manager of **10901 Olive Partners, LLC**, a Missouri limited liability company, known to me to be the person who executed the within The 10901 Olive Boulevard Condominium Declaration of Condominium in behalf of said limited liability company and acknowledged to me that he/she executed the same for the purposes therein stated.

IN TESTIMONY WHEREOF, I have hereunto set my hand and affixed my official seal in the County and State aforesaid, the day and year first above written.

Mary M. Knopf

Notary Public

MARY M. KNOPF
Notary Public - Notary Seal
State of Missouri
Commissioned for St. Louis County
My Commission Expires: December 28, 2024
Commission Number: 12409275

Attachments/Exhibits

Exhibit A. Legal Description

Exhibit B. Percentage of Ownership

Exhibit C. Common Element Expense Allocations

EXHIBIT A

Legal Description

Unit 1 and Unit 2 of The 10901 Olive Boulevard Condominium according to the Condominium Plat thereof recorded on _____, 2024 at Plat Book _____, Page _____ of the County of St. Louis Records.

EXHIBIT B

Percentage of Ownership

Unit 1	54.20%
Unit 2	45.80%

EXHIBIT C

Common Element Expense Allocations

Common Expenses shall be allocated based on each Unit Owner's Percentage of Ownership unless expressly set forth to the contrary in the Declaration, hereinabove.

Unit 1 Owner	54.20%
Unit 2 Owner	45.80%

--- Property Boundary Description ---

A tract of land situated in the City of Creve Coeur, St. Louis County, Missouri, lying in part of Section 2, Township 45 North, Range 5 East, being Adjusted Lot 2 of Boundary Adjustment Plat Westchase Shops Subdivision, a subdivision filed for record as Plat Book 353, Page 950 of the land records of said St. Louis County, Missouri, and being more particularly described as follows:

BEGINNING at the Southeast corner of Adjusted Lot 1 of said Boundary Adjustment Plat Westchase Shops Subdivision, said Southeast corner being on the Northern right-of-way line of Olive Boulevard, 90 feet wide; thence leaving said Northern right-of-way line and along the Eastern line of said Adjusted Lot 1 as follows: North 16 degrees 52 minutes 00 seconds East, a distance of 166.69 feet; North 44 degrees 44 minutes 05 seconds East, a distance of 129.21 feet to the Southwestern line of a tract of land conveyed to Westchase Apartments LP, etal, and recorded in Deed Book 22174, Page 4427 of said land records; thence leaving said Eastern line and along said Southwestern line of Westchase Apartments tract as follows: South 45 degrees 15 minutes 55 seconds East, a distance of 225.93 feet; South 27 degrees 47 minutes 09 seconds West, a distance of 146.91 feet to said Northern right-of-way line of Olive Boulevard; thence leaving said Southwestern line and along said Northern right-of-way line of Olive Boulevard as follows: 132.61 feet along the arc of a curve to the right, having a radius of 671.15 feet, through a central angle of 011 degrees 19 minutes 16 seconds, with a chord that bears North 84 degrees 39 minutes 45 seconds West, a distance of 132.40 feet; 102.68 feet along the arc of a curve to the right, having a radius of 2,115.54 feet, through a central angle of 002 degrees 46 minutes 52 seconds, with a chord that bears North 75 degrees 41 minutes 42 seconds West, a distance of 102.67 feet to the point of beginning.

Containing 1.239 Acres (53,990 Square Feet), according to a survey by Grimes Consulting, Inc, LS-343-D. Dated December 2024.

city of CREVE COEUR

300 North New Ballas Road • Creve Coeur, Missouri 63141
(314) 432-6000
www.crevecoeurmo.gov

APPLICATION TO PLANNING AND ZONING COMMISSION #24-037: PUBLIC FACILITY SITE DEVELOPMENT PLAN APPROVAL FOR SPORT FIELDS RENOVATIONS AT LADUE SCHOOLS WEST CAMPUS LOCATED AT 10900 LADUE ROAD

FOR THE MEETING OF: Tuesday, January 21, 2025

LOCATION: 10900 Ladue Road, zoned "A" Single-Family Zoning District

REQUEST: Brandon Harp, P.E., of CEDC, has submitted an application on behalf of the Ladue School District, for upgrades to the Ladue Schools West Campus, at 10900 Ladue Road. The project includes increasing the number of tennis courts, expanding the parking lot, re-arranging and upgrading the baseball field with associated facilities and adding new parking lot lighting and landscaping around the baseball field and tennis courts.

ADDITIONAL INFORMATION: Section 400.030 requires the Planning and Zoning Commission review and approval of public facilities. The Commission shall consider the application under the applicable standards established for site development plans and including but not limited to, making a determination as to whether the proposed project is consistent with the plan and complies with the Zoning Code if applicable. City Council action is not required.

Key Issues:
- Does the request integrate with the existing surrounding uses?
- Does the request further or implement the goals of the Comprehensive Plan?

Creve Coeur 2030 Plan References
- Civic Place Type District

Planning References
- Section 400.030. Approval of Public Facilities

Zoning Code References
- Section 405.250: A-Single Family Residential
- Section 405.1080: Site Concept, Site Development, and Minor Site Plan Approval

APPLICANT: Brandon Harp, P.E.
CEDC
10820 Sunset Office Drive
Sunset Hills, MO 63127

PROPERTY OWNER: Ladue School District
9703 Conway Road
St. Louis, MO 63124

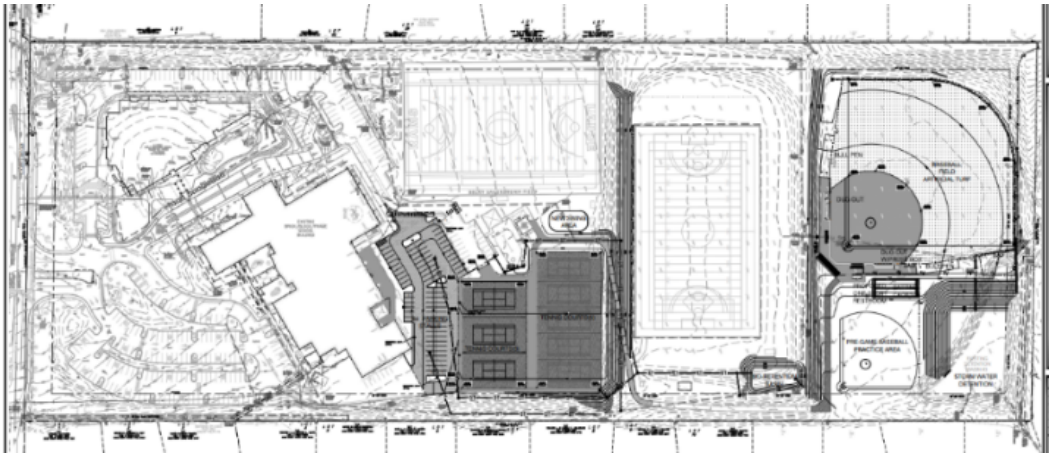

REPORT PREPARED BY: Bethany L. Moore, AICP, City Planner
DATE: 1/15/2025
ATTACHMENTS: Applicant's revised materials submitted January 13, 2025

PROPOSAL

The applicant has submitted a public facility site development plan for the Ladue School's West Campus location at 10900 Ladue Road, in order to renovate the sports fields and their related facilities. The project includes increasing the rear parking lot from 69 spaces to 103 spaces and lighting for the parking lot, upgrades to the baseball field including installing artificial turf within the existing footprint of the baseball field, new dugouts, new restroom facilities, a new press box, a new LED scoreboard, new perimeter fencing, a new practice infield and new batting cages, and upgrades to the tennis courts including reorienting the courts and increasing the number of courts from 5 to 8. New landscaping is also proposed in order to add additional screening of the facilities for the adjacent residential uses.

Section 400.030 requires Planning and Zoning Commission review of public facilities. The Commission shall review the location, extent and character of the proposed public facility in relation to the City's comprehensive plan and in consideration of the applicable standards established for site development plans and subdivision improvement plans. The review includes, but is not limited to, making a determination as to whether the proposed project is consistent with the plan and complies with the Zoning Code, if applicable. City Council action is not required. The Ladue School West Campus includes the Ladue Fifth Grade Center, the Ladue Schools Early Childhood Center and sports fields for the district. The District has operated at this location since 2011 when it purchased the property from Westminster Christian Academy. The campus consists of 30 acres within the "A" Single-Family Residential Zoning District. There are some pre-existing non-conformities on the site, including encroachments into the 50-foot buffer yards for conditional uses that abut single-family uses in a residential district. These existing encroachments will not be exaggerated with this request. The proposal will increase the site coverage to 21%, which is still below the 25% maximum.

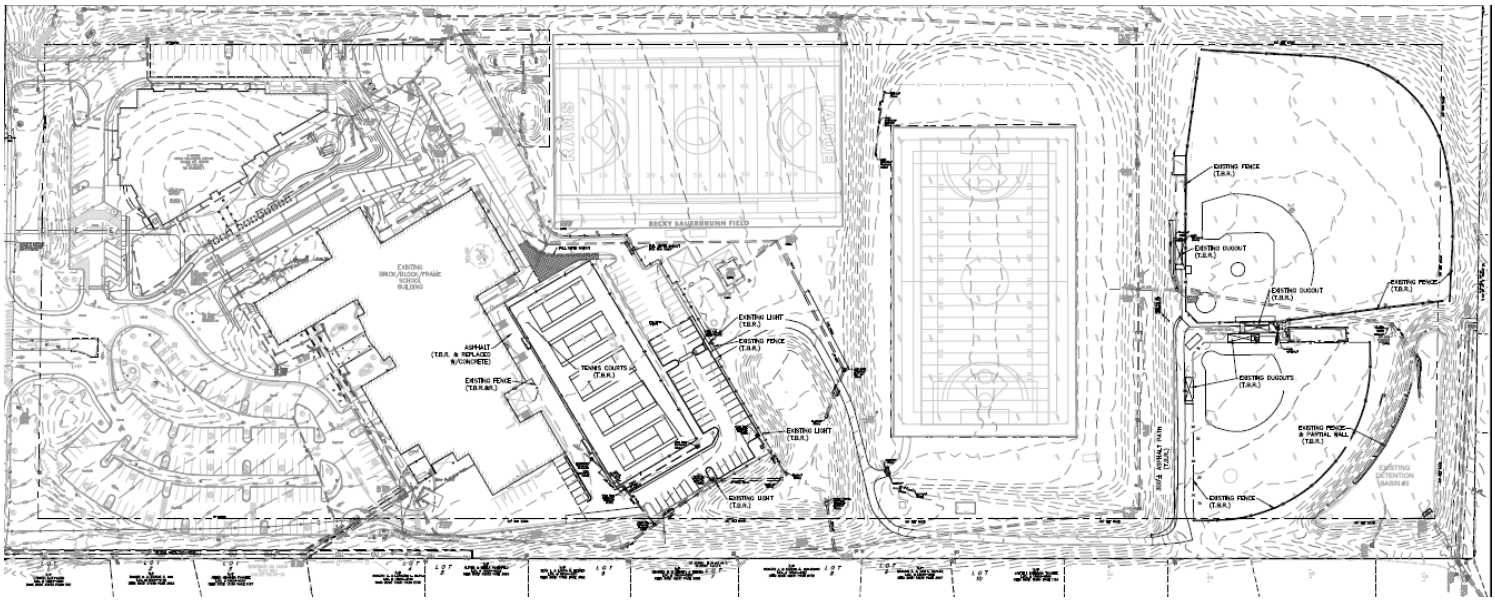

Figure 1: Existing Site Conditions.

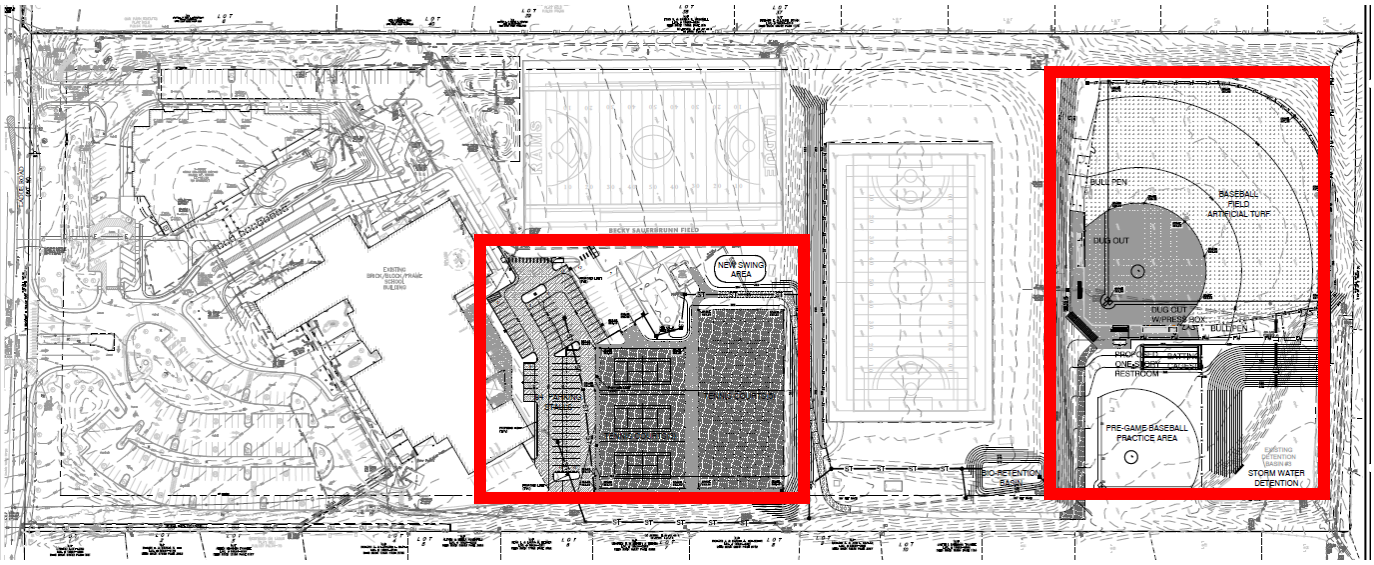

Figure 2: Proposed Site Development Plan with areas of project in red.

LAND USE AND ZONING OF SURROUNDING PROPERTIES

The adjacent zoning and land uses are as follows:

DIRECTION	USE	ZONED	SEPARATED BY
North	Single-Family Residential	A Single Family Residential	Ladue Road
South	Single-Family Residential	A-RDD Single Family Residential	N/A
East	Single-Family Residential	A-RDD Single Family Residential	N/A
West	Single-Family Residential	A Single Family Residential	N/A

COMPREHENSIVE PLAN REVIEW

Ladue Schools West Campus is included in the Civic (CV) Place Type of the Campus and Institutional District that is a community place or overlay district intended for institutional uses – including schools, churches, religious facilities, and public facilities – comprised of a single primary building with optional ancillary buildings on a single lot (p. 57). The Civic place types should protect established, existing residential neighborhoods from potential negative impacts of non-residential land uses while allowing flexibility on the interior of the site (p. 106). When lots directly abut other lots of a different residential Community Place Type, a landscape buffer, measured horizontally from the lot boundary, should be provided; and, when located in primarily residential areas, establish a "green edge" landscape zone, measured horizontally from the lot boundary, along all street frontages to maintain compatibility with surrounding development character. Buildings shall be prohibited from this landscape zone. (P. 110).

The Ladue Schools West Campus includes two buildings, the 5th Grade Center and the Early Childhood Center and previously served as the Westminster Christian Academy campus. Due to the size and location of the 30-acre campus within a residentially zoned district surrounded by residences, this campus requires a 50-foot buffer yard on the three non-street facing boundaries as all sides are abutting residential uses. The majority of the required 50-foot buffer yards are free of improvements with some grandfathered non-

conforming encroachments. The buffer yards contain trees and landscaping in order to provide screening of the facilities from the abutting residential uses.

DESIGN GUIDELINES ANALYSIS

The majority of the project pertains to upgrades to existing athletic facilities interior to the campus, but the size of the parking lot is also increasing by 34 parking stalls. The Design Guidelines state that parking lots should be to the side or rear of the building and limit vast open areas of asphalt without landscaped areas and should be located in buffer yard or setback areas, consistent with the Zoning Code (p.19-20.) The parking lot is interior to the campus and behind the main building. The new orientation of the parking lot moves the majority of the spaces further way from the 50 foot buffer yard, interior to the campus and away from the abutting residences.

The Design Guidelines recommends that multiple buildings on the same campus be designed to create a cohesive visual relationship between buildings. The location of the proposed dugout/press box and restroom buildings at the rear of the campus and between the two baseball fields means that these structures will not be visible from the street and will be minimally visible from the adjacent residences, if at all. These structures are primary made of split faced CMU in a neutral color. The main material of the two buildings on campus is brick and while the CMU material is different from the main buildings, given that these are smaller accessory buildings which are interior to the campus and not visible from the street or adjoining properties, Staff does not have concerns with the material used. The Design Guidelines do not include any additional recommendations specific to athletic fields and related components.

ZONING REVIEW

Schools are a conditional use in all of the residential zoning districts. However, as a government entity with their own elected legislative body (i.e., the school board), public schools are reviewed under Section 400.030 Approval of Public Facilities. Section 400.030(B)(2) provides that the Planning and Zoning Commission shall consider the application under the applicable standards established for site development plans and subdivision improvement plans including, but not limited to, making a determination as to whether the proposed project is consistent with the plan and complies with the Zoning Code if applicable.

Maximum site coverage for the A Single-Family Residential District is 25% and the proposal would increase the site coverage to total of 21%. In addition, under the requirements of Section 405.470, regulations for conditional uses are also found within the underlying zoning district, in this case the A Single-Family Residential district. Section 405.250(E)(4)(a)(c)(e) and (f) of yard and setback requirements requires a minimum front, side and rear yard setback for conditional uses of 50 feet, plus requiring a buffer yard of 25 feet on all sides that abut the single-family use in the residential district. The minimum required buffer yard shall be increased in 5-foot increments, up to a maximum of fifty 50 feet, for each acre of the subject property. All acreage shall be rounded up to the next whole number for buffer yard calculations purposes. An additional two (2) feet of buffer yard shall be provided for every foot of building or structure height exceeding forty-five (45) feet. The buffer yard shall not contain any impervious surface and shall be landscaped and provided with other screening devices as deemed appropriate by the Planning and Zoning Commission. Therefore, for a 30-acre property, and the building under 45 feet, the buffer yard is 50 feet, when adjacent to residential developments. As discussed above, there are existing non-conformities on the site in terms of encroachments into the required 50-foot buffer yards. The existing baseball field, which is part of the scope of this project, encroaches roughly 15 feet into the required 50-foot buffer yard at the rear of the property. The existing field will be upgraded with artificial turf in the existing footprint of the field. While not fully meeting the requirement, the degree of non-conformity for the baseball field is not being increased.

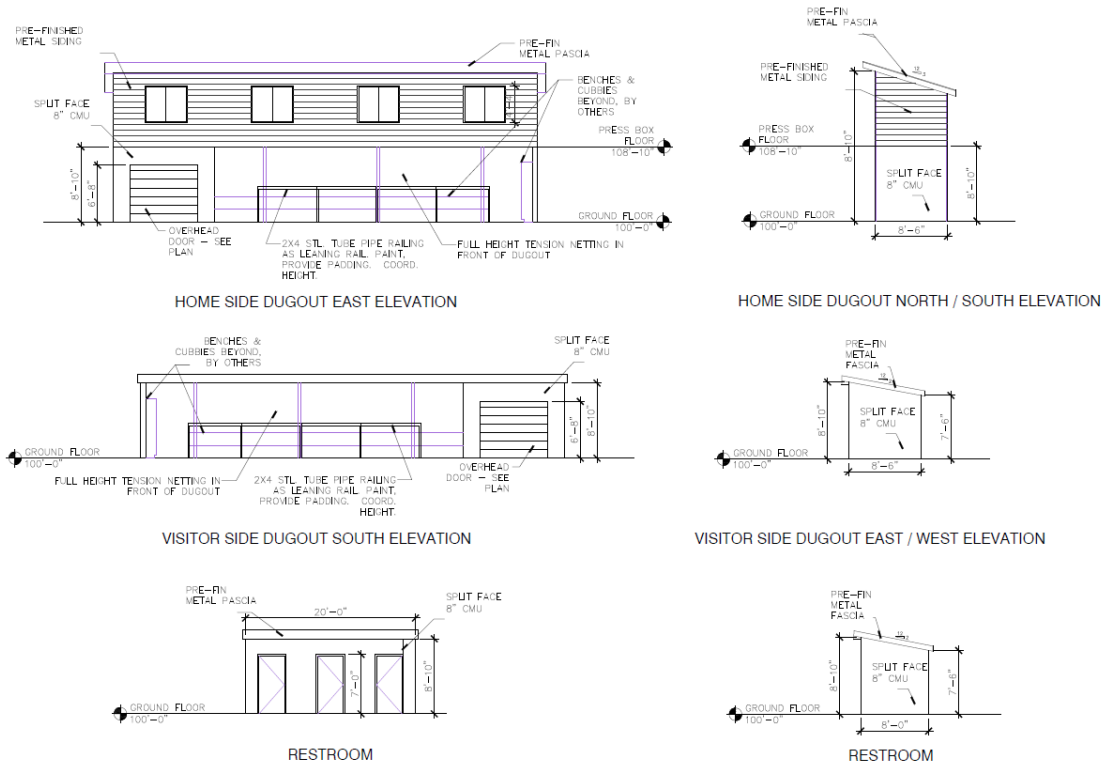

Figure 3: Proposed dug outs and restroom buildings.

Sports Facility Outbuildings
The proposal includes the construction of two new dugouts for the baseball field constructed out of split face CMU. The home side dugout includes a second story to house the press box area which will be clad in a metal siding (Fig.3). There is also a small restroom building that will be 160 square feet and also made of split face CMU. These buildings will be completely interior to the site and support the baseball field area.

Landscaping
In order to facilitate some of the proposed improvements, existing trees serving as a buffer between residential properties and the school campus will have to be removed. The applicant has provided a Landscape Plan on sheets L1.01 and L1.02 of the Site Development Plan showing the trees being removed and those being replaced. Sheet L1.01 includes the planting schedule and shows the area of the new tennis courts and expanded parking lot. (See Fig. 4.) The parking lot will include landscaping islands with shade trees installed at 3 caliper inches in compliance with Section 405.540(F)(4) *Landscaping.* As well as screening for the parking lot that is adjacent to the residential uses consisting of Viburnum shrubs installed at 48 inches in height in compliance with Section 405.540(F)(2) which requires a continuous opaque screen at a height adequate to prevent direct light from headlights cast on adjacent residential uses at a minimum height of 48 inches. 15 new evergreen trees of four different varieties will be installed along the southern portion of the new tennis courts in addition to the existing trees remaining in this location in order to screen the facilities from the residential uses to the south. Sheet L1.02 includes the area around the existing baseball field which will be getting 27 new trees, mostly evergreens, in order to fill in the buffer where the existing trees will be removed is part of this project. Staff requested additional evergreens be installed in this location in order to provide a denser buffer for the residential uses to the east and the applicant submitted a revised plan showing an increased amount of large evergreen trees that Staff determined to be appropriate in this location.

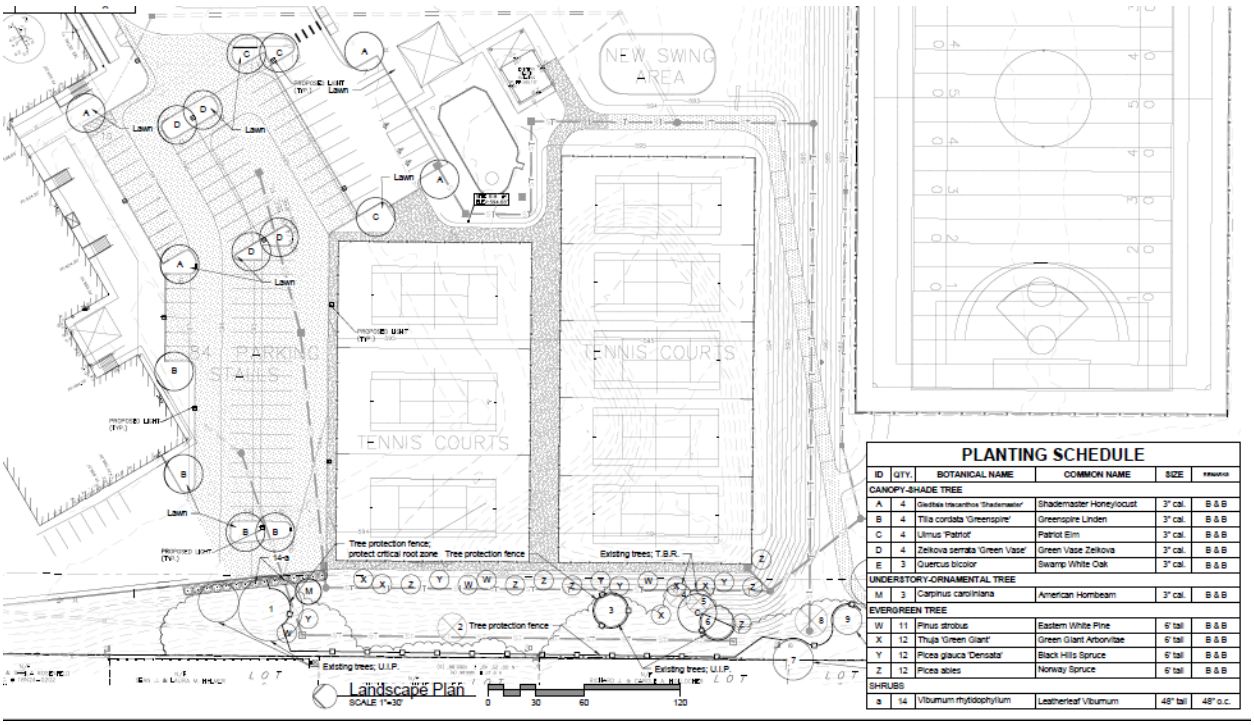

Figure 4: Sheet L1.01 of the Landscaping Plan.

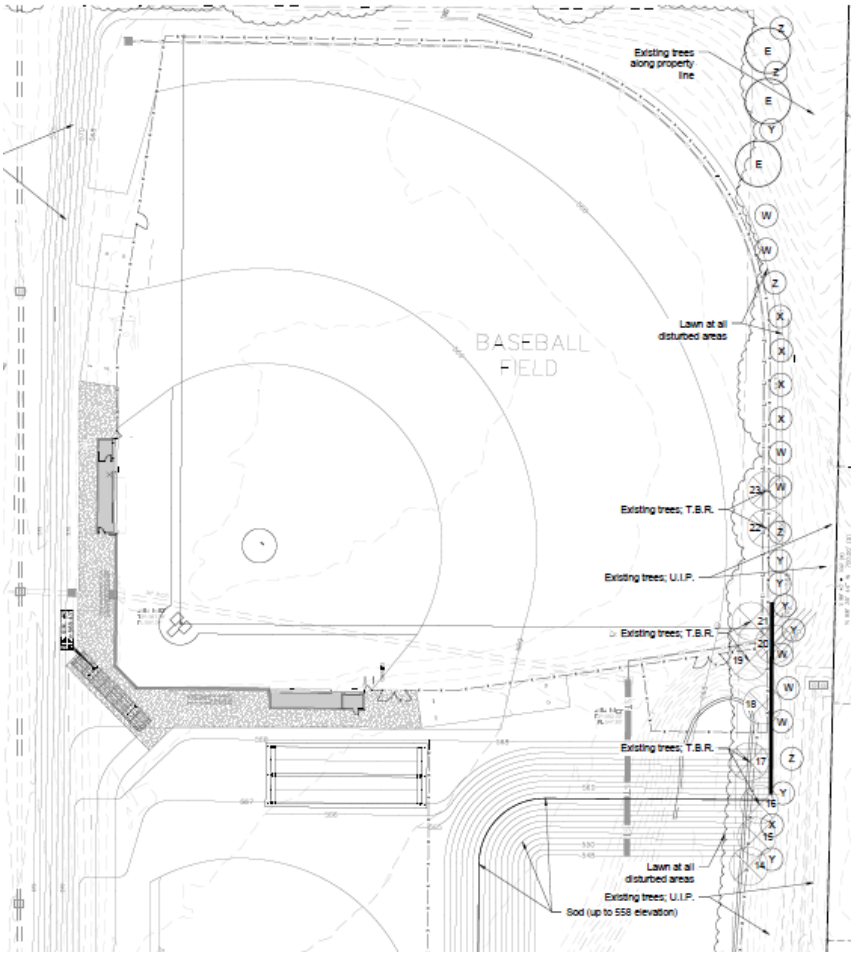

Figure 5: Sheet L1.02 of the Landscaping Plan.

Parking:
Section 405.820(H)(10)(a)(2) and (c) of the Required Off-Street Parking of the Zoning Ordinance for Elementary Schools require a minimum of two (2) spaces per classroom and 1 space per 300 square feet for the Early Childhood Center. There are 44 classrooms in the 5th Grade Center and the Early Childhood Center includes 50,000 square feet. Therefore, a total number of 255 parking spaces is required, and the site plan including the additional spaces added shows that 364 spaces are provided.

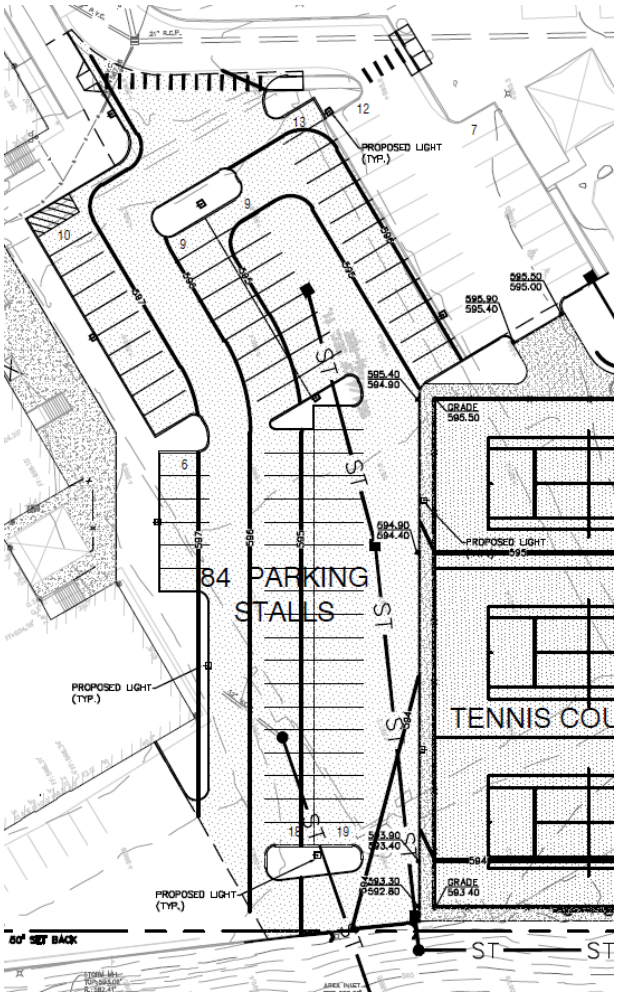

Figure 6: New Parking Area.

Lighting:
The proposal includes lighting that is consistent with Section 405.680 Lighting regulations of the Zoning Ordinance. The new lighting for the school will include pole mounted fixtures throughout the parking lot and no lighting will be added to the sports courts or athletic fields. The fixtures will be the LED with a 16 feet maximum height, including the base. The fixtures will be 100% downcast and shielded as required. Design will reflect 0 foot-candles on the property line.

Figure 7: New LED Light Fixtures.

Figure 8: Photometric Plan.

Scoreboard

A new scoreboard will be installed for the baseball field that includes LED scoring display. The sign will be 6'6" high and 20" wide. It does not include an LED screen display or sound system. The scoreboard will be placed behind the baseball field and face away from the residences.

Figure 9: Scoreboard.

Tennis Courts

The proposal includes reorienting the existing 5 tennis courts and adding 3 new ones. Reorienting the courts allows for more room for the new courts for tournaments and practice but also provides the space for the additional parking spaces and easier vehicle circulation. New trees will be installed at the buffer yard in order to serve as screening for the courts from the residential uses to the south. No lighting is proposed for the tennis courts.

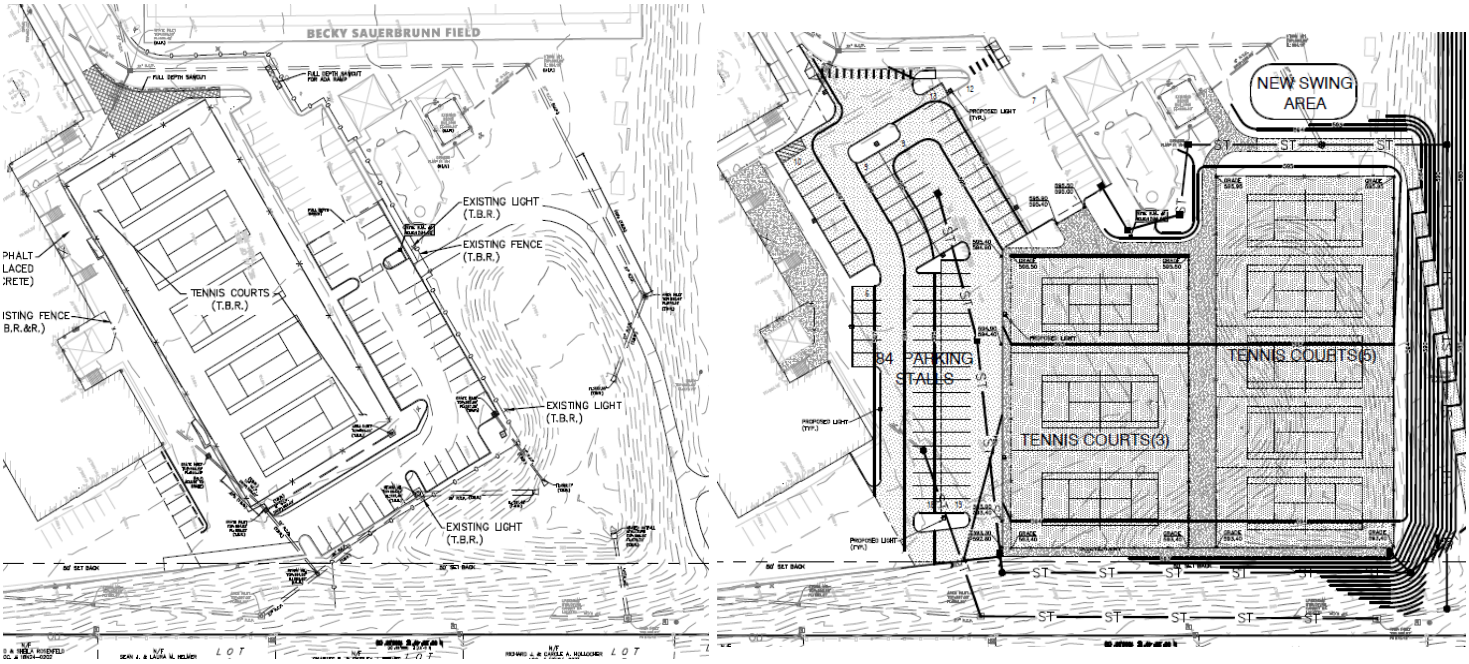

Figure 10: Existing Tennis Courts (left) and Proposed Tennis Courts (right).

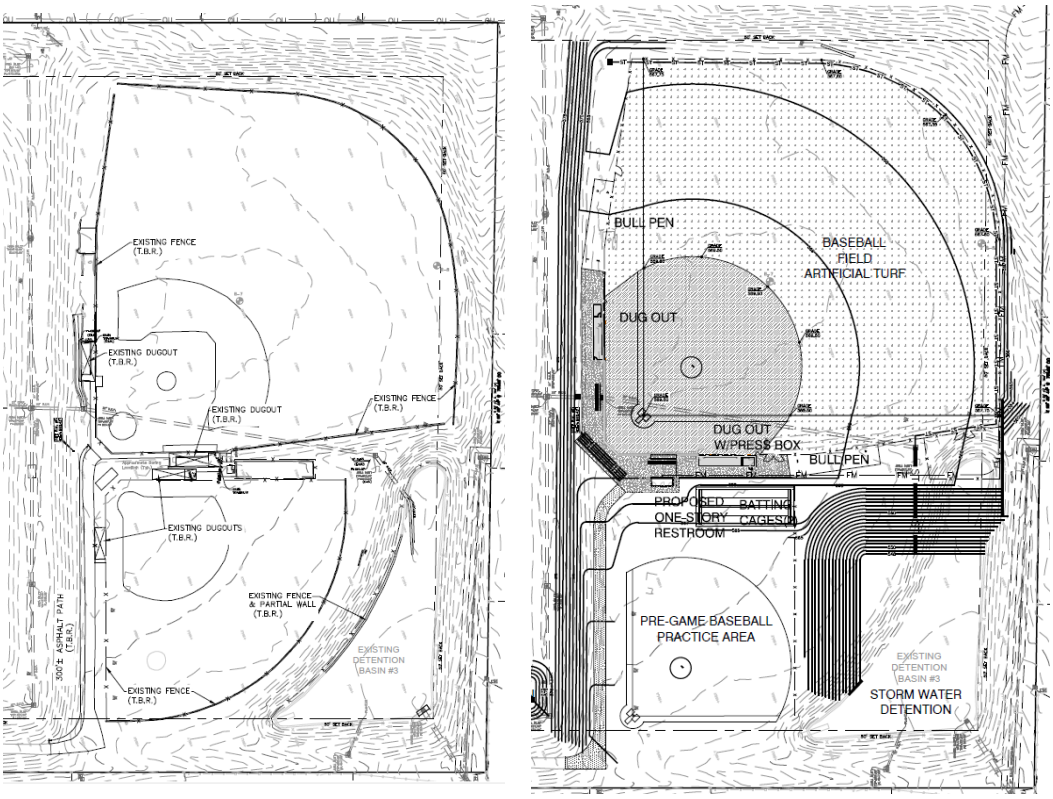

Figure 11: Existing Baseball Fields (left) and Proposed Baseball Fields (right).

Baseball Fields
Currently there is one large baseball field used for games and a smaller practice field and storm water detention area below it. A small portion of the larger baseball field extends into the 50-foot buffer about 15 feet and is considered pre-existing non-conformity according to Section 405.610 *Non-Conformities*. The footprint of this field will not be altered as part of this request, but new artificial turf will be added as well as the installation of a new black vinyl coated chain link fence around the perimeter of the outfield. New dugouts will also be installed. The existing practice field will be re-oriented and reduced in size in order to extend the existing storm water detention basin and install the new restroom building, batting cages, press box and bull pen area. No lighting is proposed for the baseball fields.

SUMMARY AND RECOMMENDATION
The submitted site development plan for the improvments to the Ladue School's West campus appears to be consistent with the Comprehensive Plan, the Design Guidelines, and the Zoning Code. Below are the recommended conditions of approval for this request.

1. The Applicant is required to submit a Building Permit application, as required by Article II of the Building Code. Exterior elevations shall be in substantial conformance with the building elevations as received on January 13, 2025, as bound together, and submitted in conjunction with Application #24-037 by CEDC.
2. The applicant is required to submit Site Improvement Plans, showing all exterior site improvements, for all new construction to the Division of Planning for review, as required by Section 410.380 of the Subdivision and Land Development Regulations (Subdivision Code). The Site Improvement Plans shall be in substantial conformance with the "Site Development Plans," and the "Landscape Plan" received on January 13, 2025, as bound together, and submitted in conjunction with Application #24-037 by CEDC.
3. The Applicant shall provide proper tree protection of the existing trees as shown on the Landscape Plan and comply with Section 405.540 Landscaping of the Zoning Ordinance.
4. All lighting shall be in compliance with the information submitted by CEDC, submitted on January 13, 2025, and shall be installed or modified to be in conformance with Section 405.680, Lighting, of the Zoning Ordinance. Any athletic field lighting proposed would require review by the Planning and Zoning Commission.
5. No site development plan or minor site plan approval shall be valid for a period longer than twelve (12) months from the date it is approved, unless within such period a building permit is obtained, and substantial construction is commenced. Substantial construction shall be deemed to consist of clearing the site, completion of footings, basement or building slab and inspection of such work, per Section 405.1080 and Section 400.030(A)(5). The Planning and Zoning Commission and the City Council, when required, may grant extensions not exceeding twelve (12) months each upon written request of the original applicant prior to the expiration of such period and resubmission of the application if the application as resubmitted is substantially the same as the initially approved application. However, the Commission and the Council, as applicable, have the power in such cases to attach new conditions to their re-approval or to disapprove the reapplication. Where the application for re-approval contains changes which the Zoning Administrator concludes materially alter the initial application, the Zoning Administrator shall initiate a new site development plan review procedure as stated in Section 405.1080 or a new minor site plan review procedure as stated in Section 405.1080.

ACTION
Should the Commission find the design and site development to be consistent with the Goals and Objectives of the Comprehensive Plan, Design Guidelines and Zoning Code, the following is an example of an appropriate motion:

> "I move to recommend approval of Application #24-037 for the Public Facility Site Development Plan for Ladue School's West Campus subject to the conditions listed in the Staff Report for the meeting of January 21, 2025" (Specific conditions discussed and approved).

APPENDIX 1: COMPREHENSIVE PLAN
Included and attached by reference. See body of report for specific excerpts.

APPENDIX 2: ZONING CODE
Included and attached by reference. See body of report for specific excerpts.

APPENDIX 3: AERIAL PHOTO

CEDC
CIVIL ENGINEERING
DESIGN CONSULTANTS

December 20, 2024

City of Creve Coeur
Planning & Zoning Commission
300 N New Ballas Road
Creve Coeur, Missouri 63141

RE: Ladue West Campus / 5th grade Center
10900 Ladue Road
Creve Coeur, Missouri 63141

Dear Mr. Chairman and Members of the Commission

On behalf of the Ladue School District, we hereby submit for your consideration a request to amend the site governing Conditional Use Permit.

The campus needs upgrades to the parking, baseball field and tennis courts on the southern part of the campus, south of the main building.

The proposed improvements are:

1. Tennis Courts
    a. Increase the number of tennis courts from 5 to 8
    b. Reposition for an optimal tournament layout
    c. Allow for safe spectator seating and pedestrian circulation
2. Parking
    a. Increase the rear lot from 69 spaces to 103 spaces (net increase 34 spaces)
    b. Enhance vehicular circulation
3. New Swing Set
4. Baseball field
    a. Rebuild with artificial turf
    b. New dug outs
    c. New restroom
    d. New press box
    e. New scoreboard
    f. New fencing
    g. New practice infield
    h. Batting cages

10820 Sunset Office Drive • Suite 200 • Saint Louis, Missouri 63127
p 314.729.1400 • f 314.729.1404 •www.cedc.net

The tennis, parking lot and baseball field are in the general location as they are currently. New high efficiency lights will be installed on the parking lot and additional landscaping is proposed in the areas of the improvements to mitigate any anticipated impact from the neighbors' views to the property

We respectfully request your positive recommendation to the City Council for the amendment to the Conditional Use Permit.

Please contact me should you have any questions or require additional information.

Sincerely,
AUTHORIZED AGENT
Civil Engineering Design Consultants, Inc.

Brandon A. Harp, P.E.
President

10820 Sunset Office Drive • Suite 200 • Saint Louis, Missouri 63127
p 314.729.1400 • f 314.729.1404 •www.cedc.net

Site Development Plan
LADUE SCHOOLS - WEST CAMPUS

A TRACT OF LAND BEING PART OF THE SOUTHEAST 1/4 OF SECTION 11, TOWNSHIP 45 NORTH, RANGE 5 EAST OF THE 5TH PRINCIPAL MERIDIAN
CITY OF CREVE COEUR,
ST. LOUIS COUNTY, MISSOURI

LEGEND

EXISTING CONTOURS	433
PROPOSED CONTOURS	433
EXISTING STORM SEWER	
PROPOSED STORM SEWER	ST ST
EXISTING SANITARY SEWER	
PROPOSED SANITARY SEWER	SAN SAN
RIGHT-OF-WAY	
EASEMENT	
CENTERLINE	
EXISTING TREE	12"
EXISTING SPOT ELEVATION	× 433.28
PROPOSED SPOT ELEVATION	433.28
SWALE	
TO BE REMOVED	T.B.R.
TO BE REMOVED & RELOCATED	T.B.R.& R.
TO BE USED IN PLACE	U.I.P.
ADJUST TO GRADE	A.T.G.
BACK OF CURB	B.C.
FACE OF CURB	F.C.
WATER MAIN	W W
GAS MAIN	GAS GAS
UNDERGROUND TELEPHONE	T T
OVERHEAD WIRE	OHE OHE
UNDERGROUND ELECTRIC	E E
SILTATION CONTROL	X X
FIRE HYDRANT	
POWER POLE	
WATER VALVE	WV
LIGHT STANDARD	

ABBREVIATIONS

N	NORTH
S	SOUTH
E	EAST
W	WEST
EX.	EXISTING
PR.	PROPOSED
CONC	CONCRETE
ASPH	ASPHALT
PB	PLAT BOOK
DB	DEED BOOK
PG	PAGE
SF	SQUARE FEET
AC	ACRES
ELEV	ELEVATION
FF	FINISH FLOOR
FL	FLOWLINE
PVC	POLYVINYL CHLORIDE PIPE
RCP	REINFORCED CONCRETE PIPE
STM	STORM
SAN	SANITARY
(S)	SAVE
(R)	REMOVE
(T.B.R.)	TO BE REMOVED
(U.I.P.)	USE IN PLACE

SYMBOLS

WATER MANHOLE	WMH
TELEPHONE MANHOLE	TMH
BRUSH & SHRUB LINE	
BOLLARD	
SIGN	
ELECTRIC YARD LIGHT	
BORING LOCATION	
MAIL BOX	MB
ELECTRIC BOX	EB
CLEAN OUT	CO
GAS VALVE	GV
GAS METER	GM
GAS DRIP	GD

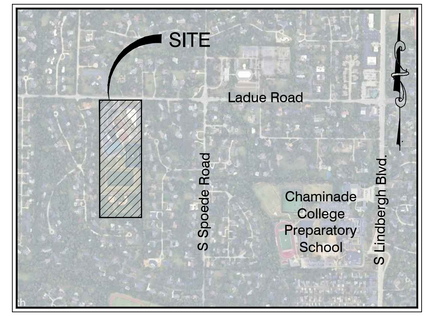

LOCATION MAP
N.T.S.

PROPERTY DATA

OWNER	= LADUE SCHOOL DISTRICT
ADDRESS	= 10900 LADUE ROAD CREVE COEUR, MO 63141
LOCATOR NUMBER	= 18N330035
ZONING	= "A" – SINGLE FAMILY RESIDENTIAL
PROJECT SITE	= 30± ACRES (S.F.±)
WATER SHED	= DEER CREEK
FEMA	= 29189C0193K (2/4/2015)
FIRE DISTRICT	= CREVE COEUR
SCHOOL DISTRICT	= LADUE SCHOOL DISTRICT
ELECTRIC SERVICE	= AMEREN UE

SHEET INDEX

SD1	TITLE SHEET
SD2	OVERALL PLAN
SD3.0–SD3.1	EXISTING CONDITIONS PLAN
SD4.0–SD4.1	GRADING AND SEWER PLAN
LT1	LIGHTING PLAN
A1	BUILDING ELEVATIONS
L1.01	LANDSCAPE PLAN
L1.02	LANDSCAPE PLAN

BENCHMARK

13214 NAVD88(SLC2011A) ELEV = 574.75 FTUS (OR) 175.185 METER
NGVD29 ELEV = 575.16 FTUS
"STANDARD ALUMINUM DISK" STAMPED SL–43 1992 DISK IS SET ALONG THE NORTH SIDE OF CLAYTON ROAD IN FRONT OF LE CHATEAU VILLAGE SHOPPING CENTER; 140' WEST OF THE EAST ENTRANCE. APPROXIMATELY 0.3 MILES WEST OF LINDBERGH BOULEVARD.

OBSERVED AT ELEV:574.53 FTUS WITH A CARLSON BRX7 ROVER BRAODCASTING THE MODOT CORS. VRS. NETWORK NAVD88. NO ADJUSTMENTS MADE.

SITE BENCHMARK

SITE B.M. #1 ELEV:594.68 FTUS

SITE B.M. #2 ELEV:568.43 FTUS

NOTE:
THE UNDERGROUND UTILITIES HAVE BEEN PLOTTED FROM AVAILABLE SOURCES AND THEIR LOCATIONS MUST BE CONSIDERED APPROXIMATE ONLY. THE VERIFICATION OF THE ACTUAL LOCATIONS OF ALL UNDERGROUND UTILITIES, EITHER SHOWN OR NOT SHOWN ON THIS DRAWING, SHALL BE THE RESPONSIBILITY OF THE CONTRACTOR AND SHALL BE LOCATED PRIOR TO GRADING OR CONSTRUCTION OF IMPROVEMENTS.

AMEREN MISSOURI ELECTRIC
EVERSTREAM SOLUTIONS
AT&T DISTRIBUTION
CHARTER COMMUNICATIONS
MODOT ST. LOUIS DISTRICT
LUMEN
MISSOURI AMERICAN WATER CO.
MCI
SPIRE MO EAST
ST. LOUIS METROPOLITAN SEWER DIST.

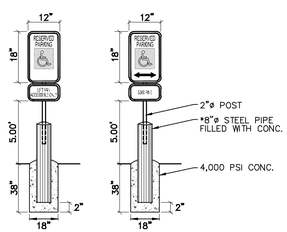

ACCESSIBLE PARKING SIGN

- STANDARD SIGN FACE, STANDARD HIGHWAY DEPARTMENT OR CITY STREET DEPARTMENT GAUGE
- LETTERS AND BORDERS ARE GREEN
- HANDICAP LOGO SQUARE IS BLUE AND THE BACKGROUND IS WHITE
- SET BOTTOM OF "FINE" SIGN 60" A.F.G.

*IF INSTALLED IN PARKING LOT

ADA SIGN
(n.t.s.)

NOTE:
ADA GRAPHIC SHALL BE WHITE OR PER LOCAL CODE

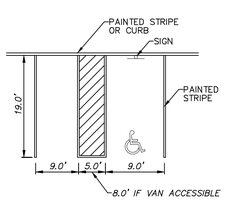

TYPICAL PARKING STALLS
(n.t.s.)

NOTE:
ADA STRIPING & GRAPHIC SHALL BE WHITE OR PER LOCAL CODE

UTILITIES / REVIEW AGENCIES

ELECTRIC COMPANY = AMEREN MISSOURI – DORSETT
DISTRICT 12121 DORSETT ROAD
ST. LOUIS, MO 63043
PH: (314) 344–9501
ATTN: MS. CHRISTINE D. GRUNBAUM

PHONE COMPANY = AT&T
909 CHESTNUT AVE.
9–T–04
ST. LOUIS, MO 63101
PH: (636) 402–7076
ATTN: BRAEDEN BATTLES

GAS COMPANY = SPIRE
720 OLIVE STREET ROOM
1408 ST. LOUIS, MO 63101
PH: (314) 575–8423
ATTN: DAVID SHERMAN

STORM / SANITARY = METROPOLITAN ST. LOUIS SEWER DISTRICT
2350 MARKET STREET
ST. LOUIS, MO 63103
PH: (314) 768–6200
FAX (314) 768–6302
ATTN: ENGINEERING

WATER COMPANY = MISSOURI AMERICAN WATER COMPANY
1050 RESEARCH BLVD.
ST. LOUIS, MO 63132
PH: (314) 996–2474
ATTN: MR. LAMAR WHITE

CABLE TELEVISION = CHARTER COMMUNICATIONS, INC.
MAPPING & DESIGN DEPARTMENT
101 NORTHWEST PLAZA DRIVE
ST. ANN, MO 63074
ATTN: ROBERT SEWELL

FIRE DISTRICT = CREVE COEUR FIRE PROTECTION DISTRICT
11221 OLIVE BOULEVARD
ST. LOUIS, MISSOURI 63141
PH: (314) 432–5570
FAX: (314) 432–2367
ATTN: MR. JASON MACINTOSH, FIRE MARSHAL

LAND DESCRIPTION

A TRACT OF LAND IN THE SOUTHEAST 1/4 OF SECTION 11, TOWNSHIP 45 NORTH RANGE 5 EAST AND DESCRIBED AS FOLLOWS: BEGINNING AT THE INTERSECTION OF THE SOUTHERN LINE OF LADUE ROAD, 60 FEET WIDE, WITH THE WESTERN LINE OF TRACT CONVEYED TO CHARLES M. HUTTING BY DEED RECORDED IN BOOK 1772 PAGE 124 (WHICH IS NOW THE NORTHWEST CORNER OF OAK PARK ESTATES NO. 3, A SUBDIVISION OF RECORD); THENCE ALONG SAID HUTTING TRACT SOUTH 0 DEGREES 27 MINUTES WEST 1866.86 FEET TO A POINT; THENCE NORTH 88 DEGREES 40 MINUTES WEST 700 FEET TO A POINT; THENCE NORTH 0 DEGREES 27 MINUTES EAST 1866.86 FEET TO A POINT IN THE SOUTHERN LINE OF LADUE ROAD AND THENCE ALONG THE SOUTHERN LINE SOUTH 88 DEGREES 40 MINUTES EAST 700 FEET TO THE POINT OF BEGINNING.

GENERAL NOTES

1.) ALL UTILITIES SHOWN HAVE BEEN LOCATED FROM AVAILABLE RECORDS. THEIR LOCATION SHOULD BE CONSIDERED APPROXIMATE. THE CONTRACTOR HAS THE RESPONSIBILITY TO NOTIFY ALL UTILITY COMPANIES, PRIOR TO CONSTRUCTION, TO HAVE EXISTING UTILITIES FIELD LOCATED. THE CONTRACTOR SHALL BE ON RECORD WITH THE MISSOURI ONE CALL SYSTEM. ALL PROPOSED UTILITIES SHALL BE UNDERGROUND.

2.) ALL ELEVATIONS ARE BASED ON BENCHMARK SHOWN.

3.) BOUNDARY AND TOPOGRAPHIC SURVEY BY MARLER SURVEYING COMPANY.

4.) ALL ON–SITE MATERIALS AND METHODS OF CONSTRUCTION TO MEET THE CURRENT STANDARDS AND SPECIFICATIONS OF THE CITY OF CREVE COEUR, MODOT AND M.S.D.

5.) ALL GRADED AREAS SHALL BE PROTECTED FROM EROSION BY EROSION CONTROL DEVICES AND/OR SEEDING AND MULCHING AS REQUIRED BY THE CITY OF CREVE COEUR AND MODOT.

6.) PRIOR TO BEGINNING ANY WORK ON THE SITE, THE SUBCONTRACTOR SHALL CONTACT THE GENERAL CONTRACTOR FOR SPECIFIC INSTRUCTIONS RELEVANT TO THE SEQUENCING OF WORK.

7.) GRADING CONTRACTOR SHALL INSTALL SILTATION CONTROL PRIOR TO STARTING THE GRADING. ADDITIONAL SILTATION CONTROL DEVICES SHALL BE INSTALLED AS DIRECTED BY THE CITY OF CREVE COEUR.

8.) ALL FILLS AND BACKFILLS SHALL BE MADE OF SELECTED EARTH MATERIALS, FREE FROM BROKEN MASONRY, ROCK, FROZEN EARTH, RUBBISH, ORGANIC MATERIAL AND DEBRIS.

9.) GRADING CONTRACTOR SHALL KEEP EXISTING ROADWAYS CLEAN OF MUD AND DEBRIS AT ALL TIMES W/REGULAR CLEANING.

10.) PROPOSED CONTOURS SHOWN ARE FINISHED ELEVATIONS ON PAVED AREAS.

11.) ALL GRADING AND DRAINAGE TO BE IN CONFORMANCE WITH THE CITY OF CREVE COEUR AND M.S.D.

12.) SIDEWALKS ALONG THE ACCESSIBLE ROUTE SHALL NOT HAVE A SLOPE EXCEEDING 1"V:20"H. SLOPES GREATER THAN 1"V:20"H MUST BE DESIGNED AS A RAMP. SIDEWALKS TO BE CONSTRUCTED TO ST. LOUIS COUNTY ADA STANDARDS.

13.) SIDEWALKS, CURB RAMPS, RAMPS AND ACCESSIBLE PARKING SPACES SHALL BE CONSTRUCTED IN ACCORDANCE WITH THE CURRENT APPROVED "AMERICANS WITH DISABILITIES ACT ACCESSIBILITY GUIDELINES" (ADAAG) ALONG WITH THE REQUIRED GRADES, CONSTRUCTION MATERIALS, SPECIFICATIONS AND SIGNAGE. IF ANY CONFLICT OCCURS BETWEEN THE ADAA GUIDELINES AND THE INFORMATION ON THE PLANS, THE ADAA GUIDELINES SHALL TAKE PRECEDENCE AND THE CONTRACTOR SHALL NOTIFY THE PROJECT ENGINEER PRIOR TO ANY CONSTRUCTION.

14.) NO GRADE SHALL EXCEED 3(H):1(V) UNLESS JUSTIFIED BY GEOTECHNICAL REPORT THAT HAS BEEN APPROVED BY THE CITY OF CREVE COEUR.

15.) STORM WATER SHALL BE DISCHARGED AT AN ADEQUATE NATURAL DISCHARGE POINT. SINKHOLES ARE NOT ADEQUATE NATURAL DISCHARGE POINTS.

16.) ALL LANDSCAPED AREAS TO BE FILLED WITH A MINIMUM OF 6" OF TOPSOIL.

17.) ALL LANDSCAPED AREAS DISTURBED BY OFF–SITE WORK SHALL BE IMMEDIATELY SEEDED OR SODDED, AS DIRECTED BY THE CITY OF CREVE COEUR UPON COMPLETION OF WORK IN THE AREA AFFECTED.

18.) ADEQUATE TEMPORARY OFF–STREET PARKING FOR CONSTRUCTION EMPLOYEES SHALL BE PROVIDED. PARKING ON NON–SURFACED AREAS SHALL BE PROHIBITED IN ORDER TO ELIMINATE THE CONDITION WHEREBY MUD FROM CONSTRUCTION AND EMPLOYEES' VEHICLES IS TRACKED ONTO THE PAVEMENT CAUSING HAZARDOUS ROADWAY AND DRIVEWAY CONDITIONS.

19.) ALL SEWER CONSTRUCTION AND MATERIALS TO BE IN ACCORDANCE WITH THE METROPOLITAN ST. LOUIS SEWER DISTRICT STANDARD CONSTRUCTION SPECIFICATIONS FOR SEWER AND DRAINAGE FACILITIES, (LATEST EDITION).

20.) STRUCTURE SETBACKS (PER SECTION 405.250 (E)(4))

FRONT	50 FT.
SIDE–PERMITTED USE	15 FT. OR 15% OF THE LOT WIDTH, WHICHEVER IS LESS, PROVIDED THAT A MINIMUM SIDE YARD OF 7 1/2 FEET MUST BE PROVIDED FOR ANY NON–CONFORMING LOT.
SIDE–CONDITIONAL USE	50 FT. (EXCEPT AS MODIFIED BY SECTION 405.250(E)(3)(B))
REAR–PERMITTED USE	30 FT.
REAR–CONDITIONAL USE	50 FT. (EXCEPT AS MODIFIED BY SECTION 405.250(E)(3)(B)).

21.) PARKING SETBACKS

FRONT 10 FT.

22.) PARKING CALCULATIONS (PER ARTICLE VII OFF–STREET PARKING AND LOADING REGULATIONS; ZONING SECTION 405.820)(10)

A. EDUCATIONAL SERVICES

ELEMENTARY AND SECONDARY SCHOOLS (NAICS 6111).
1. EARLY CHILDHOOD CENTER. ONE PER 300 S.F.
2. JUNIOR HIGH AND ELEMENTARY SCHOOLS. TWO (2) SPACES PER CLASSROOM.

B. REQUIRED PARKING
EARLY CHILDHOOD CENTER
50,000/300 = 167 SPACES
JUNIOR HIGH
44x2 = 88 PARKING SPACES
TOTAL = 255 SPACES

C. PARKING PROVIDED
9'x19' = 364 PARKING SPACES
ADA = 7 PARKING SPACES

23.) NO ON–SITE ILLUMINATION SOURCE SHALL BE SO SITUATED THAT LIGHT IS CAST DIRECTLY ON ADJOINING PROPERTIES OR ROADWAYS. ILLUMINATION LEVELS SHALL COMPLY WITH THE REQUIREMENTS OF THE CITY OF CREVE COEUR. THE SITE LIGHTING STANDARDS AND LOCATIONS SHALL BE REVIEWED AND APPROVED PER THE REQUIREMENTS OF THE CITY OF CREVE COEUR. LIGHTING DESIGN SUBJECT TO FINAL DESIGN OF LIGHTING ENGINEER.

24.) LANDSCAPING SHALL COMPLY WITH THE REQUIREMENTS OF THE CITY OF CREVE COEUR.

25.) ALL PROPOSED IMPROVEMENTS SHALL BE CONSTRUCTED TO THE CITY OF CREVE COEUR

26.) SIGNAGE PROPOSED FOR THIS SITE SHALL BE IN COMPLIANCE WITH THE ORDINANCES OF THE CITY OF CREVE COEUR.

27.) DENSITY CALCULATIONS (REFERENCE SECTION 405.250(E)(3b))

C. MAXIMUM STRUCTURE HEIGHT.
MAXIMUM STRUCTURE HEIGHT FOR SCHOOLS, CHURCHES AND OTHER PLACES OF WORSHIP. FIFTY (50) FEET. IN ADDITION, SUCH USES SHALL MEET A SKY EXPOSURE PLANE REQUIREMENT. THE SKY EXPOSURE PLANE WILL BE MEASURED FROM A LINE LOCATED THIRTY–FIVE (35) FEET ABOVE GRADE AND FIFTY (50) FEET FROM THE PROPERTY LINE ON THE CONDITIONAL USE SITE AND WILL HAVE A SLOPE OF THIRTY DEGREES (30°) RISING TOWARDS THE CENTER OF THE SITE. NO PORTION OF THE BUILDING OR STRUCTURE SHALL PENETRATE THIS SKY EXPOSURE PLANE.

D. MAXIMUM SITE COVERAGE. TWENTY–FIVE PERCENT (25%). (REFERENCE SECTION 405.250(E)(3e))

E. SITE COVERAGE:
ALLOWED: 25%
PROPOSED SITE COVERAGE
a. BUILDING FOOTPRINT = 96,050 S.F. (7%)
b. PARKING/DRIVE = 176,160 S.F. (13.5%)
c. SITE COVERAGE = 272,210 S.F./ 1,307,380 S.F. = 21%

28.) FLOOR AREA RATIO (F.A.R.) (REFERENCE SECTION 405.250(E)(3d))
MAXIMUM FLOOR AREA RATIO = THREE–TENTHS (0.3)
96,050 s.f. BUILDING = 0.07
1,307,380 s.f. SITE AREA

29.) INTERIOR PARKING LANDSCAPING CALCULATIONS
PER Section 405.540(F)(3): IN ADDITION TO ANY LANDSCAPED FRONT, BACK OR SIDE YARD AREAS REQUIRED BY THIS OR ANY OTHER SECTION, A MINIMUM OF TEN (10) SQUARE FEET OF INTERIOR LANDSCAPED AREA SHALL BE PROVIDED WITHIN THE PARKING LOT FOR EACH THREE HUNDRED FIFTY (350) SQUARE FEET OF PAVED AREA WITHIN THE PARKING LOT INCLUDING PARKING SPACES AND DRIVING AISLES.
350 S.F./31,432 S.F. PAVED AREA = 90 (10 S.F.) = 900 S.F.

30.) AN UNDERGROUND IRRIGATION SYSTEM SHALL BE INSTALLED AS REQUIRED PER SECTION 405.540(10), AND SHALL SERVE ALL PLANTINGS AND ALL NATURAL TURF AREAS

31.) PARKING LOT LIGHTING SHALL BE DOWNCAST AND FULLY SHIELDED IN CONFORMANCE WITH SECTION 405.680 LIGHTING, OF THE ZONING CODE.

32.) ALL SIGNS AND BANNERS SHALL BE IN CONFORMANCE WITH ARTICLE VIII, SIGN REGULATIONS OF THE ZONING CODE. THE RELOCATION AND REPLACEMENT OF ALL SIGNS SHALL REQUIRE A PERMIT PER ARTICLE VIII SIGN REGULATIONS. ANY NON–CONFORMING SIGN AREAS MUST BE DOCUMENTED PRIOR TOT HE REMOVAL AND REPLACEMENT OF THE SIGN.

PREPARED FOR:
Ladue School District
Mr. Mike Noonan
Director of Facilities
9701–R Conway
St. Louis, Missouri

PREPARED BY:
CEDC CIVIL ENGINEERING DESIGN CONSULTANTS
10820 Sunset Office Drive
Suite 200
St. Louis, Missouri 63127
314.729.1400
Fax: 314.729.1404
www.cedc.net

STATE OF MISSOURI
BRANDON ASHER HARP
NUMBER E-28650
PROFESSIONAL ENGINEER
BRANDON A. HARP, P.E. E–28650
CIVIL ENGINEER
CEDC LICENSE NO.: 2003004674

CEDC CIVIL ENGINEERING DESIGN CONSULTANTS
10820 Sunset Office Drive
Suite 200
Saint Louis, Missouri 63127
314.729.1400
Fax: 314.729.1404
www.cedc.net

Site Development Plan for
LADUE SCHOOLS - WEST CAMPUS
ATHLETICS IMPROVEMENTS
10900 Ladue Road
Creve Coeur, Missouri 63141

Proj. # 2531

No.	Description	Date
	CITY SUBMITTAL	12-20-24

TITLE SHEET

SD1

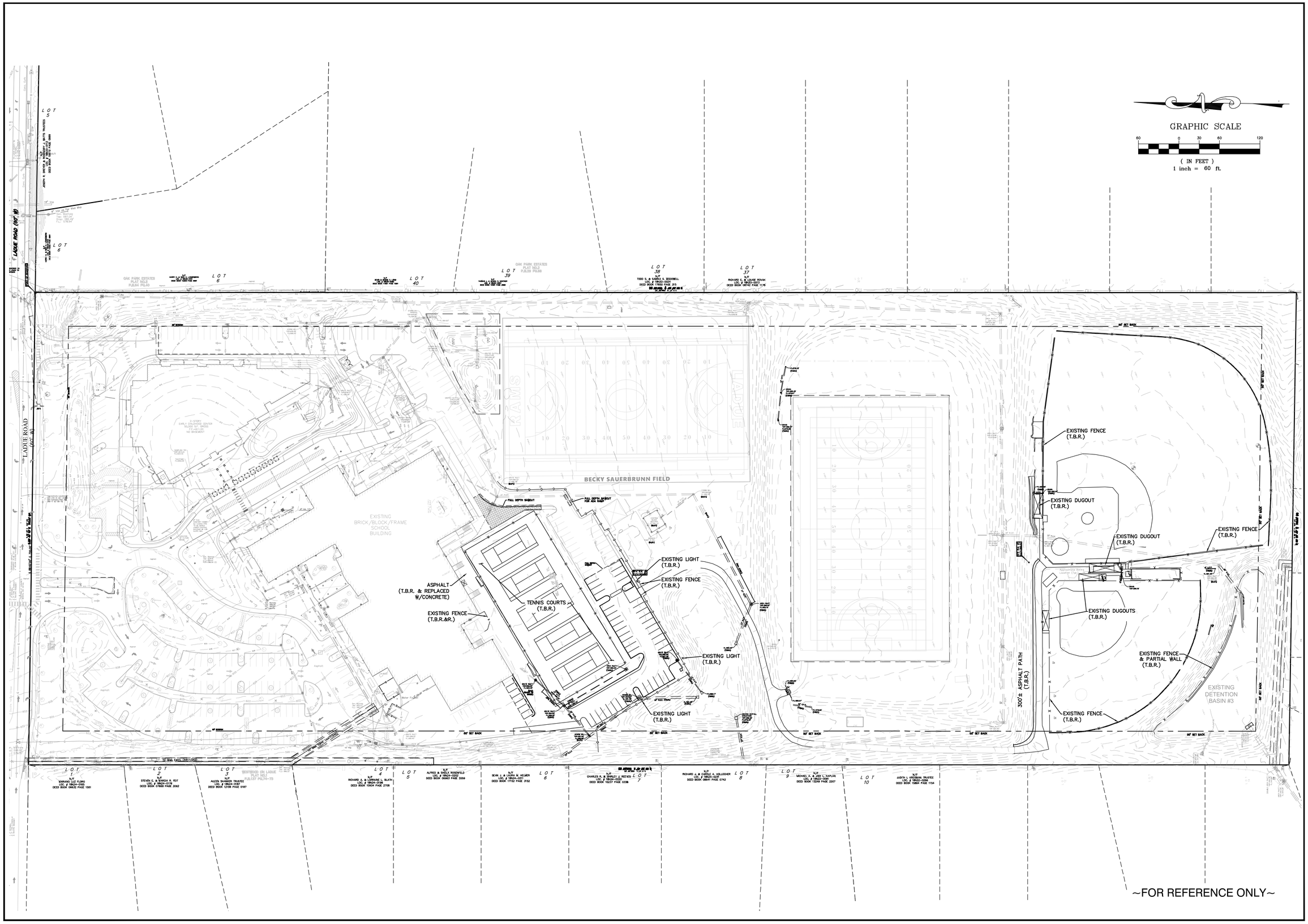

STATE OF MISSOURI
BRANDON ASHER HARP
NUMBER E-28650
REGISTERED PROFESSIONAL ENGINEER

BRANDON A. HARP, P.E. E-28650
CIVIL ENGINEER
CEDC LICENSE NO.: 2003004674

CEDC
CIVIL ENGINEERING
DESIGN CONSULTANTS
10820 Sunset Office Drive
Suite 200
Saint Louis, Missouri 63127
314.729.1400
Fax: 314.729.1404
www.cedc.net

Site Development Plan for
LADUE SCHOOLS - WEST CAMPUS
ATHLETICS IMPROVEMENTS
10900 Ladue Road
Creve Coeur, Missouri 63141

Proj. # 2531

No.	Description	Date
	CITY SUBMITTAL	12-20-24

EXISTING CONDITIONS PLAN

SD2

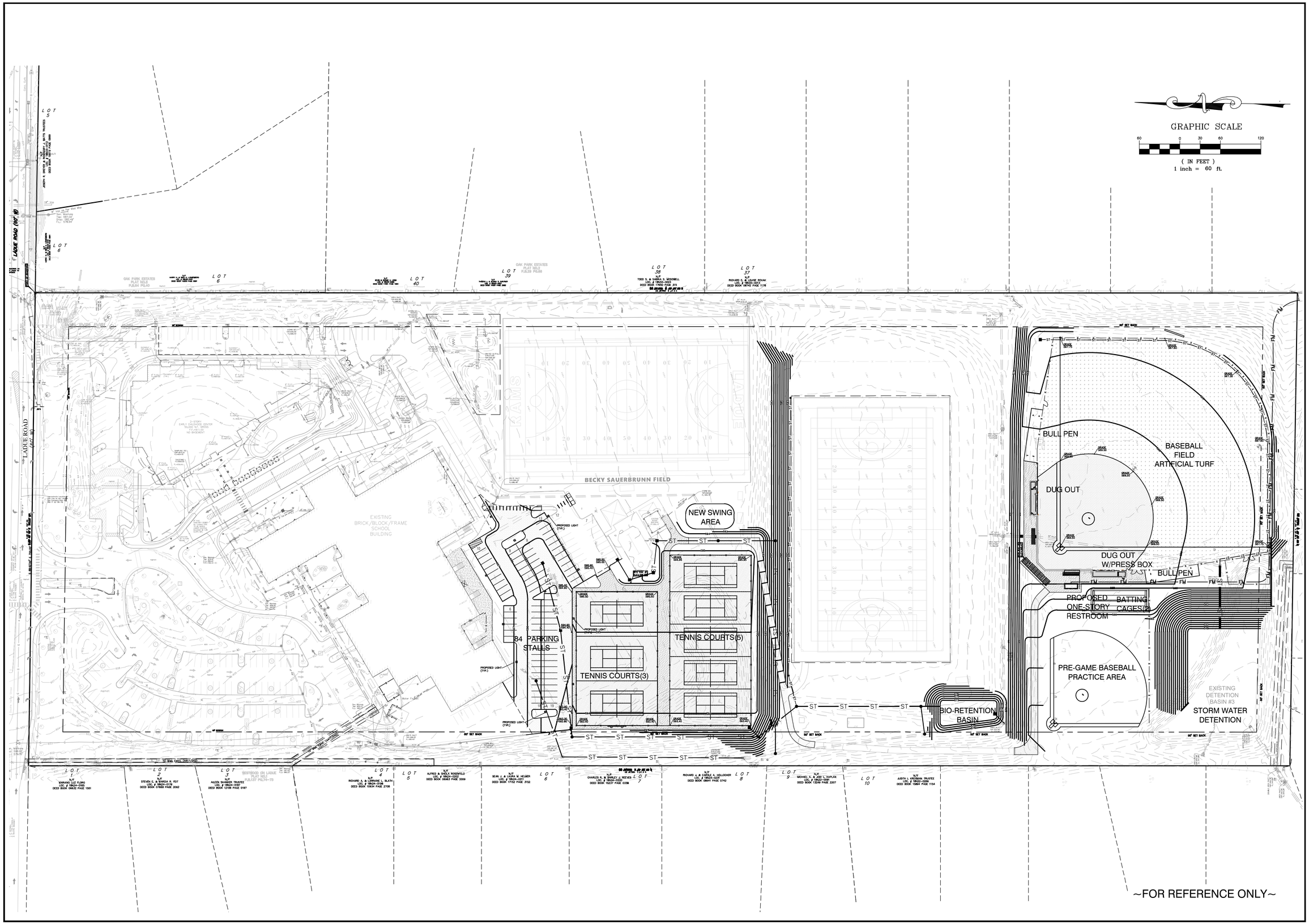

STATE OF MISSOURI
BRANDON ASHER HARP
NUMBER E-28650
PROFESSIONAL ENGINEER

BRANDON A. HARP, P.E. E-28650
CIVIL ENGINEER
CEDC LICENSE NO.: 2003004674

CEDC
CIVIL ENGINEERING
DESIGN CONSULTANTS
10820 Sunset Office Drive
Suite 200
Saint Louis, Missouri 63127
314.729.1400
Fax: 314.729.1404
www.cedc.net

Site Development Plan for
LADUE SCHOOLS - WEST CAMPUS
ATHLETICS IMPROVEMENTS
10900 Ladue Road
Creve Coeur, Missouri 63141

Proj. # 2531

No.	Description	Date
	CITY SUBMITTAL	12-20-24

OVERALL PLAN

SD3

STATE OF MISSOURI
BRANDON ASHER HARP
NUMBER E-28650
PROFESSIONAL ENGINEER

BRANDON A. HARP, P.E. E-28650
CIVIL ENGINEER
CEDC LICENSE NO.: 2003004674

CEDC
CIVIL ENGINEERING
DESIGN CONSULTANTS
10820 Sunset Office Drive
Suite 200
Saint Louis, Missouri 63127
314.729.1400
Fax: 314.729.1404
www.cedc.net

Site Development Plan for
LADUE SCHOOLS - WEST CAMPUS
ATHLETICS IMPROVEMENTS
10900 Ladue Road
Creve Coeur, Missouri 63141

Proj. # 2531

No.	Description	Date
	CITY SUBMITTAL	12-20-24

SITE DEVELOPMENT PLAN

SD4

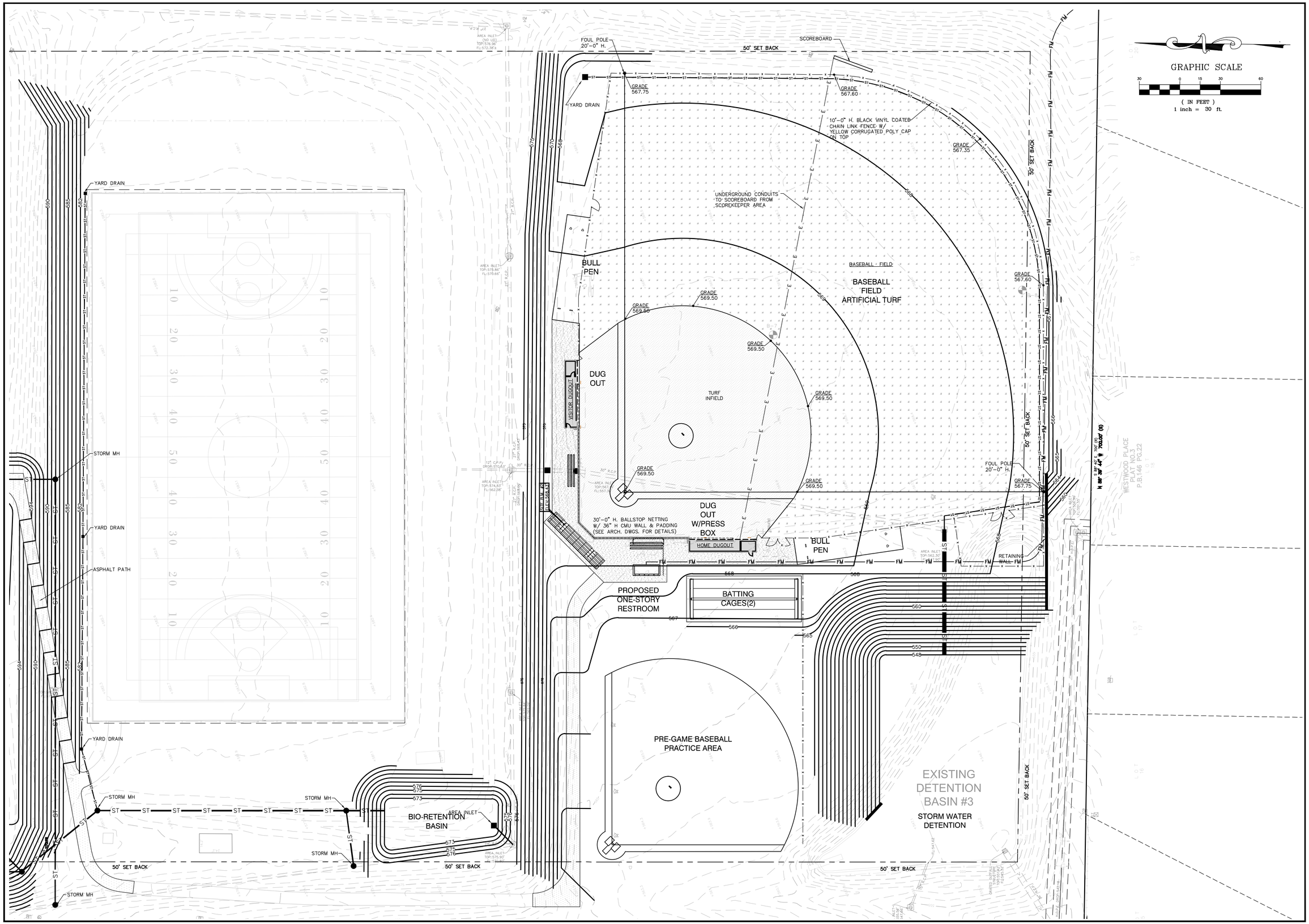

STATE OF MISSOURI
BRANDON
ASHER HARP
NUMBER
E-28650
REGISTERED PROFESSIONAL ENGINEER

BRANDON A. HARP, P.E. E-28650
CIVIL ENGINEER
CEDC LICENSE NO.: 2003004674

CEDC
CIVIL ENGINEERING
DESIGN CONSULTANTS
10820 Sunset Office Drive
Suite 200
Saint Louis, Missouri 63127
314.729.1400
Fax: 314.729.1404
www.cedc.net

Site Development Plan for
LADUE SCHOOLS - WEST CAMPUS
ATHLETICS IMPROVEMENTS
10900 Ladue Road
Creve Coeur, Missouri 63141

Proj. # 2531

No.	Description	Date
	CITY SUBMITTAL	12-20-24

SITE DEVELOPMENT
PLAN

SD5

FIXTURES MOUNTED AT 16' INCLUDING BASE
LIHGHT LEVEL CALCULATED ON THE GROUND

Calculation Summary							
Label	CalcType	Units	Avg	Max	Min	Avg/Min	Max/Min
SITE	Illuminance	Fc	1.4	3.4	0.5	2.86	6.80
SPILL LIGHT	Illuminance	Fc	0.0	0.2	0.0	N.A.	N.A.

Luminaire Schedule								
Symbol	Qty	Label	Arrangement	LLF	Luminaire Lumens	Luminaire Watts	Total Watts	Description
	5	F1	Single	0.900	7576	52	260	PRV-C15-D-UNV-T5-BZ
	3	F2	Single	0.900	7088	52	156	PRV-C15-D-UNV-T4-BZ
	3	F3	Single	0.900	7111	52	156	PRV-C15-D-UNV-T3-BZ

DESIGN IS BASED ON CURRENT INFORMATION PROVIDED AT THE TIME OF REQUEST. ANY CHANGES IN MOUNTING HEIGHT OR LOCATION, LAMP WATTAGE, LAMP TYPE, AND EXISTING FIELD CONDITIONS, THAT EFFECT ANY OF THE PREVIOUSLY MENTIONED, WILL VOID CURRENT LAYOUT AND REQUIRE A CHANGE REQUEST AND RECALCULATION.

GRAPHIC SCALE

30 0 15 30 60

(IN FEET)
1 inch = 30 ft.

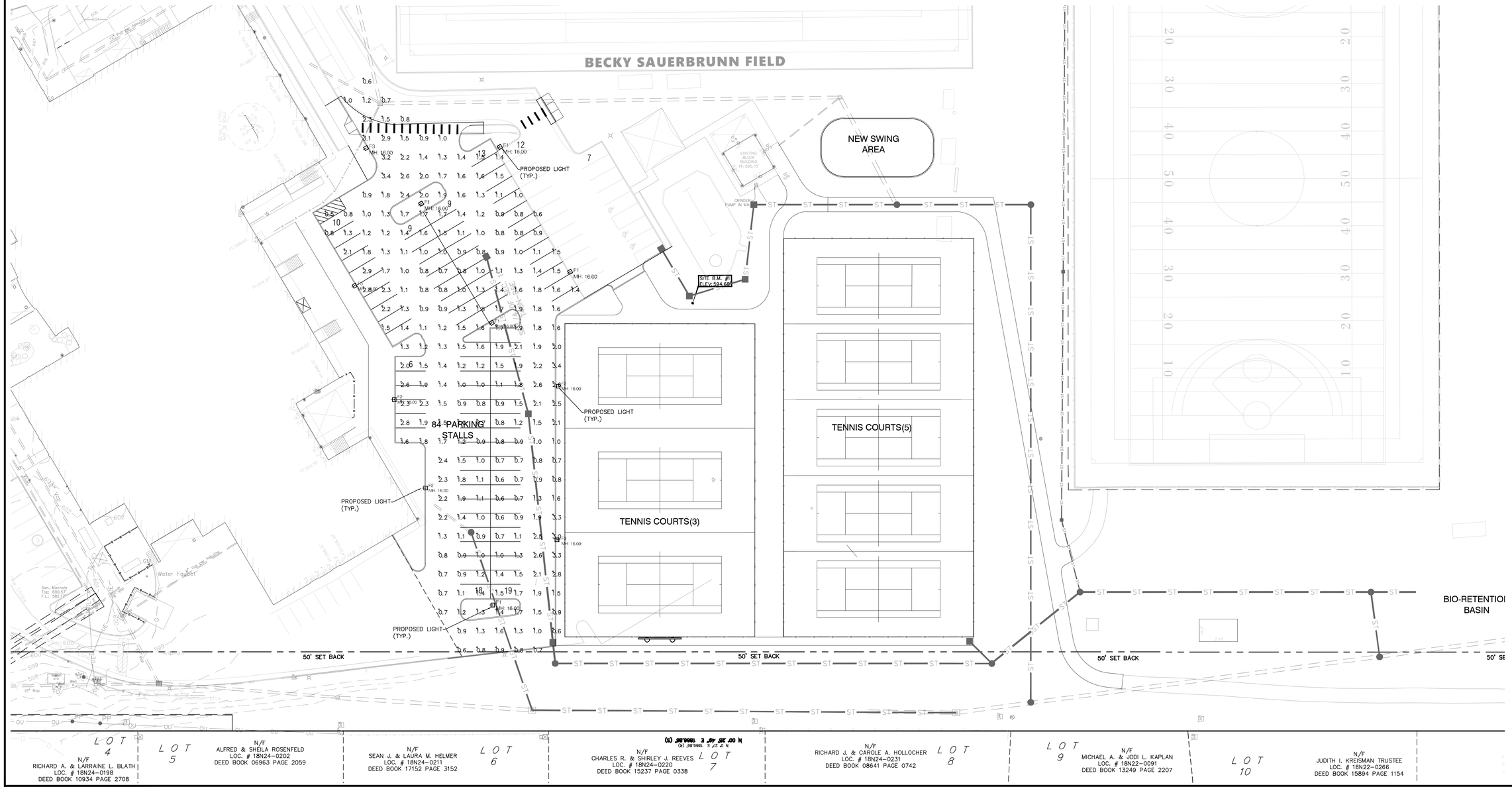

STATE OF MISSOURI
BRANDON ASHER HARP
NUMBER E-28650
PROFESSIONAL ENGINEER

BRANDON A. HARP, P.E. E-28650
CIVIL ENGINEER
CEDC LICENSE NO.: 2003004674

CEDC
CIVIL ENGINEERING
DESIGN CONSULTANTS
10820 Sunset Office Drive
Suite 200
Saint Louis, Missouri 63127
314.729.1400
Fax: 314.729.1404
www.cedc.net

Site Development Plan for
LADUE SCHOOLS - WEST CAMPUS
ATHLETICS IMPROVEMENTS
10900 Ladue Road
Creve Coeur, Missouri 63141

Proj. # 2531

No.	Description	Date
	CITY SUBMITTAL	12-20-24

LIGHTING PLAN

LT1

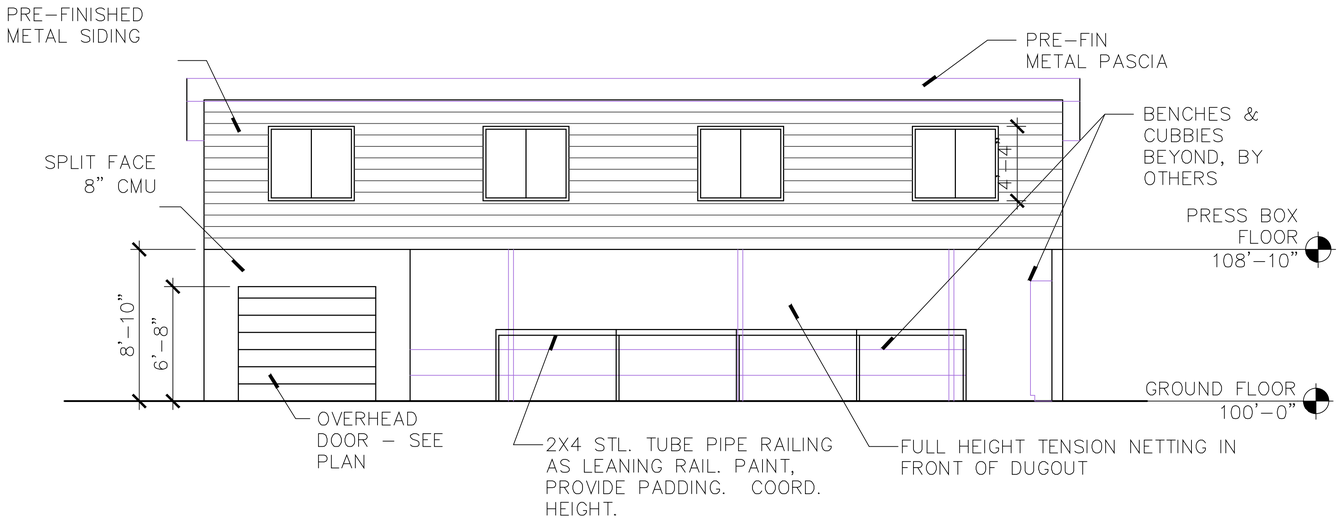

HOME SIDE DUGOUT EAST ELEVATION

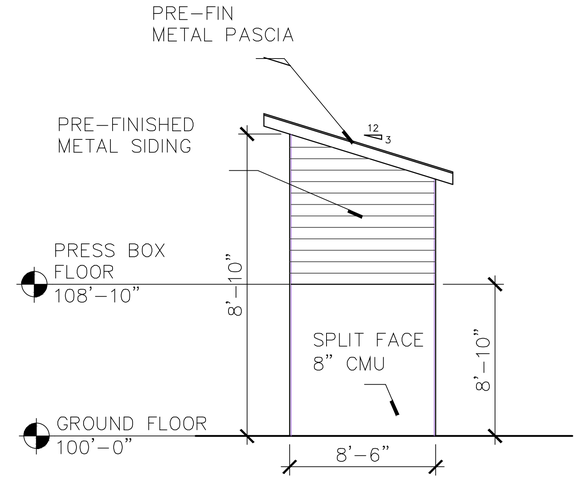

HOME SIDE DUGOUT NORTH / SOUTH ELEVATION

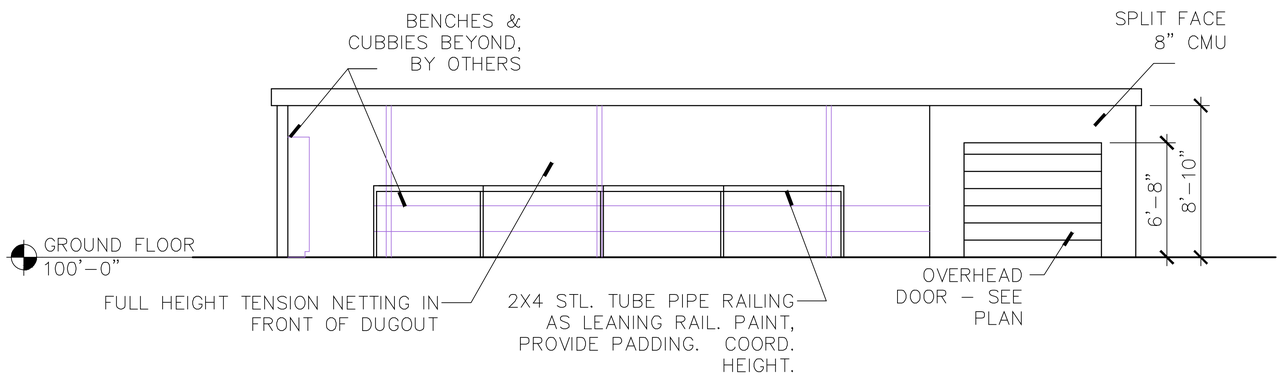

VISITOR SIDE DUGOUT SOUTH ELEVATION

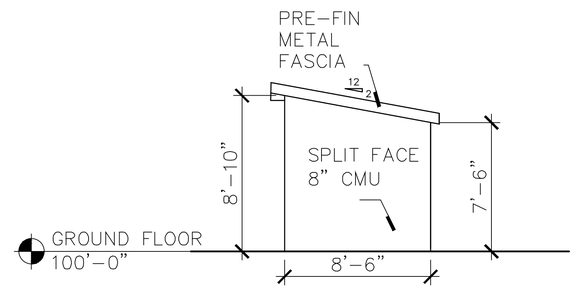

VISITOR SIDE DUGOUT EAST / WEST ELEVATION

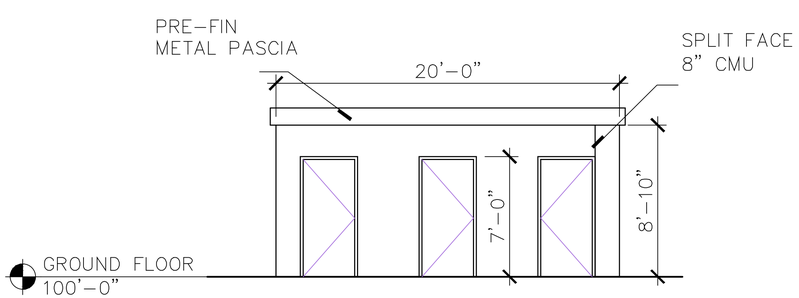

RESTROOM

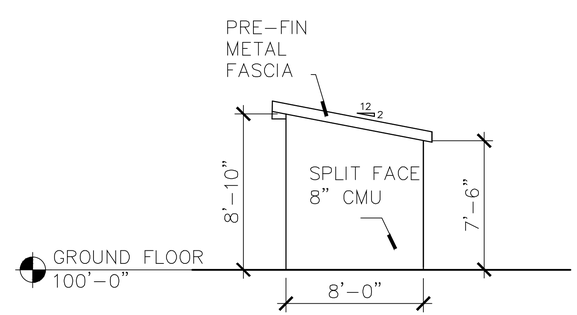

RESTROOM

STATE OF MISSOURI
BRANDON ASHER HARP
NUMBER E-28650
REGISTERED PROFESSIONAL ENGINEER

BRANDON A. HARP, P.E. E-28650
CIVIL ENGINEER
CEDC LICENSE NO.: 2003004674

CEDC
CIVIL ENGINEERING
DESIGN CONSULTANTS
10820 Sunset Office Drive
Suite 200
Saint Louis, Missouri 63127
314.729.1400
Fax: 314.729.1404
www.cedc.net

Site Development Plan for
LADUE SCHOOLS - WEST CAMPUS
ATHLETICS IMPROVEMENTS
10900 Ladue Road
Creve Coeur, Missouri 63141

Proj. # 2531

No.	Description	Date
	CITY SUBMITTAL	12-20-24

BUILDING ELEVATIONS

A1

EXISTING TREE INVENTORY

ID	TREE SPECIES	DBH	CANOPY DIAMETER	CONDITION RATING	TO BE PRESERVED	TO BE REMOVED
1	Oak	20	40		X	
2	Ash	10	18	Poor		X
3	Maple	12	20	Fair	X	
4	White Pine	12	15	Fair		X
5	Maple	8	15	Fair		X
6	White Pine	12	20	Fair	X	
7	White Pine	18	25	Fair	X	
8	White Pine	12	20	Fair		X
9	White Pine	10	18		X	
10	S. Maple	20	30		X	
11	White Pine	10	18	Fair	X	
12	White Pine	10	20	Fair	X	
13	Oak	16	30	Fair	X	
14	White Pine	10	20	Fair		X
15	White Pine	8	20	Fair		X
16	White Pine	10	20	Fair		X
17	White Pine	10	20	Fair		X
18	White Pine	12	20	Fair		X
19	White Pine	0	0	Dead		X
20	White Pine	12	20	Fair		X
21	White Pine	10	20	Fair		X
22	White Pine	12	20	Fair		X
23	White Pine	12	20	Fair		X

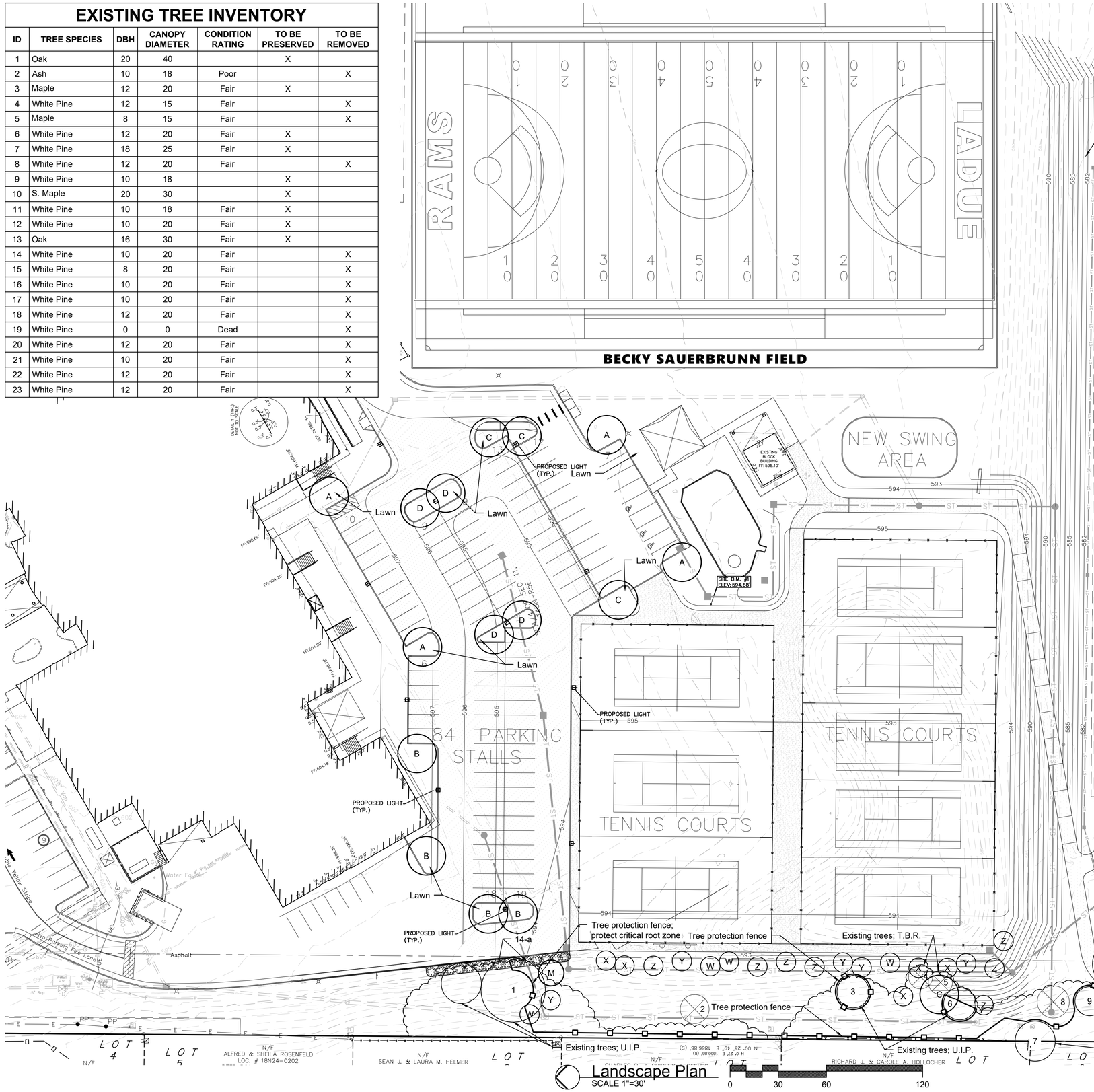

Landscape Plan
SCALE 1"=30'

Landscape Notes:

1) Lawn areas shall be turf-type Tall Fescue Grass or approved equivalent.
2) All 3:1 or steeper slopes shall be lawn seed and have erosion control blanket.
3) Topsoil in all disturbed lawn areas at 6" depth.
4) Soil mix in all shrub beds at 8" depth.
5) All mulch to be double ground bark mulch.
6) Bed edges to be spade cut.
7) Protect and maintain all irrigation systems. Adapt existing system to accommodate new landscape area around building. Zone lawns independent of shrub beds.
8) Refer to Landscape Plan sheet L1.02 for ball field area and planting details.

Lawn at all disturbed areas

PLANTING SCHEDULE

ID	QTY.	BOTANICAL NAME	COMMON NAME	SIZE	REMARKS
CANOPY-SHADE TREE					
A	4	Gleditsia triacanthos 'Shademaster'	Shademaster Honeylocust	3" cal.	B & B
B	4	Tilia cordata 'Greenspire'	Greenspire Linden	3" cal.	B & B
C	4	Ulmus 'Patriot'	Patriot Elm	3" cal.	B & B
D	4	Zelkova serrata 'Green Vase'	Green Vase Zelkova	3" cal.	B & B
E	3	Quercus bicolor	Swamp White Oak	3" cal.	B & B
UNDERSTORY-ORNAMENTAL TREE					
M	3	Carpinus caroliniana	American Hornbeam	3" cal.	B & B
EVERGREEN TREE					
W	11	Pinus strobus	Eastern White Pine	6' tall	B & B
X	12	Thuja 'Green Giant'	Green Giant Arborvitae	6' tall	B & B
Y	12	Picea glauca 'Densata'	Black Hills Spruce	6' tall	B & B
Z	12	Picea abies	Norway Spruce	6' tall	B & B
SHRUBS					
a	14	Viburnum rhytidophyllum	Leatherleaf Viburnum	48" tall	48" o.c.

Jerald Saunders - Landscape Architect
MO License # LA-007

Consultants:

Ladue Schools - West Campus Athletics Improvements

10900 Ladue Road
Creve Coeur, Missouri 63141

Revisions:

Date	Description	No.
1/13/25	City Comments	1

Drawn: KP
Checked: RS

LOOMIS ASSOCIATES
landscape architects + planners
750 spurit 40 park drive, chesterfield, missouri 63005
t. 636-519-8668
www.loomis-associates.com
Loomis Associates Inc.
Missouri State Certificate of Authority #: LAC #000019

Sheet Title: Landscape Plan

Sheet No: L1.01

Date: 12/20/24
Job #: 583.076

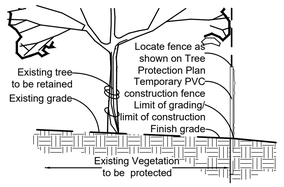

Tree Protection Detail

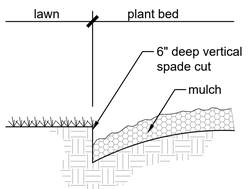

Spade Cut Bed Edge

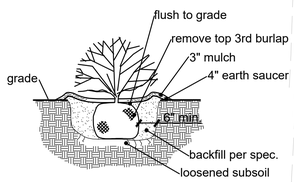

Scarify root ball of all container stock

Typical Shrub Planting

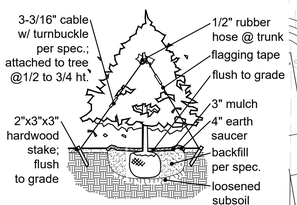

Typical Evergreen Planting

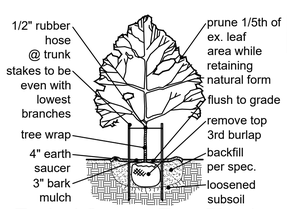

Typical Canopy Tree Planting

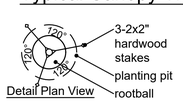

Detail Plan View

Landscape Notes:

1) Lawn areas shall be turf-type Tall Fescue Grass or approved equivalent.
2) All 3:1 or steeper slopes shall be lawn seed and have erosion control blanket.
3) Topsoil in all disturbed lawn areas at 6" depth.
4) Soil mix in all shrub beds at 8" depth.
5) All mulch to be double ground bark mulch.
6) Bed edges to be spade cut.
7) Protect and maintain all irrigation systems. Adapt existing system to accommodate new landscape area around building. Zone lawns independent of shrub beds.
8) Refer to Landscape Plan sheet L1.01 for parking lot and tennis court area and existing tree inventory.

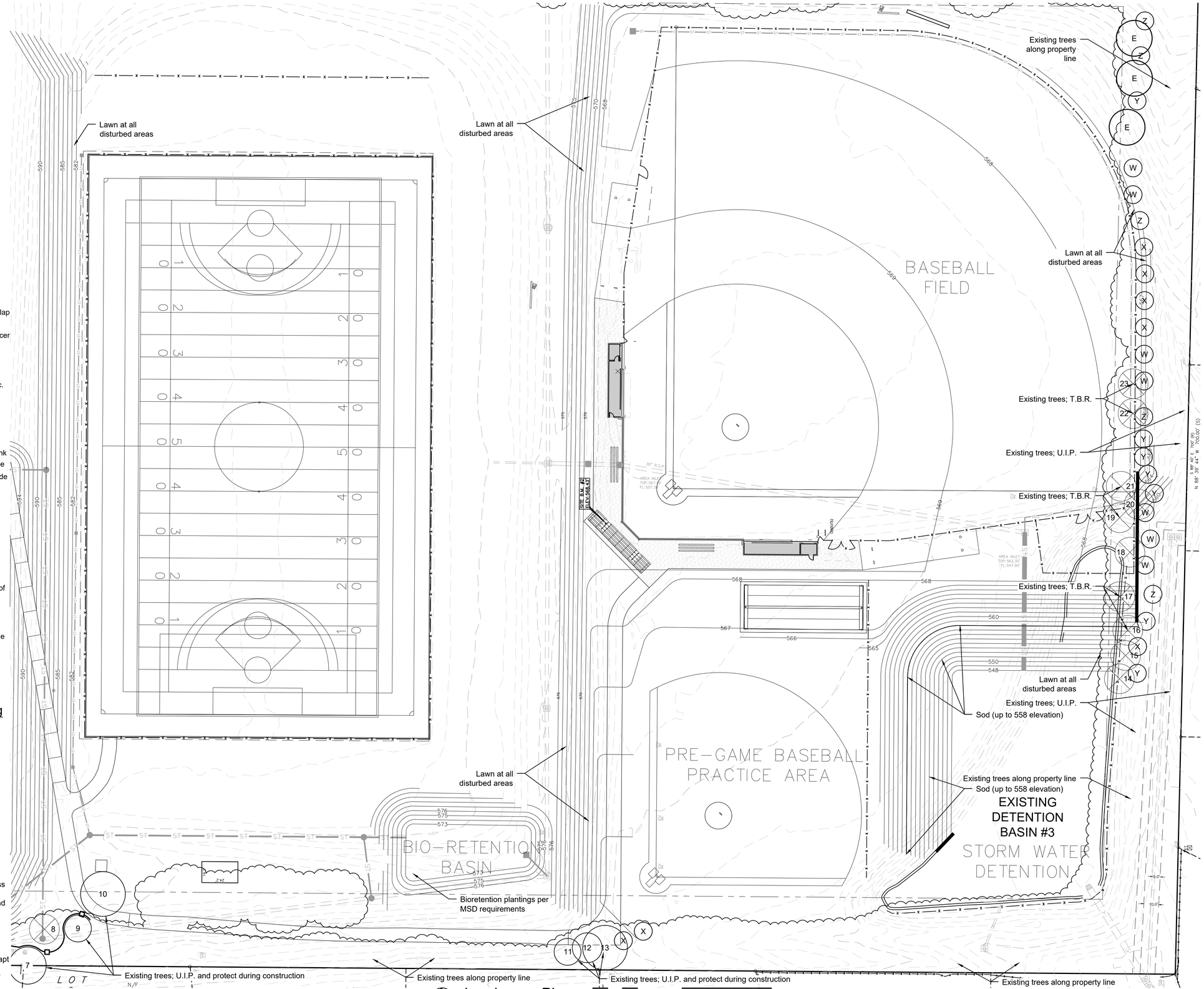

Landscape Plan

SCALE 1"=30'

0 30 60 120

Jerald Saunders - Landscape Architect
MO License # LA-007

Consultants:

Ladue Schools - West Campus Athletics Improvements

10900 Ladue Road
Creve Coeur, Missouri 63141

Revisions:

Date	Description	No.
1/13/25	City Comments	1

Drawn: KP
Checked: RS

LOOMIS ASSOCIATES
landscape architects + planners
750 spirit 40 park drive, chesterfield, missouri 63005
t. 636-519-8668
www.loomis-associates.com
Loomis Associates Inc.
Missouri State Certificate of Authority #: LAC #000019

Sheet Title: Landscape Plan

Sheet No: L1.02

Date: 12/20/24
Job #: 583.076

DAKTRONICS BA-2005 PRODUCT SPECIFICATIONS

This outdoor LED baseball/softball scoreboard displays HOME and GUEST team scores for up to nine innings, total RUNS to 99 for each team, AT BAT to 99, BALL to three, STRIKE to two and OUT to two. Scoreboard can show TIME or PITCH COUNT instead of AT BAT with included reversible caption panel. Scoreboard shown with optional striping and amber PanaView® digits.

		VINYL CAPTIONS (STANDARD)	TNMCS & VINYL CAPTIONS
POWER (120 VAC)*	Red/Amber Digits	260 Watts, 2.2 Amps	330 Watts, 2.8 Amps
	White Digits	560 Watts, 4.7 Amps	720 Watts, 6.0 Amps
UNCRATED WEIGHT		600 lb (272 kg)	680 lb (308 kg)
DIMENSIONS		6'-6" H x 20'-0" W x 8" D (1.98 m, 6.10 m, 203 mm)	

**Scoreboard requires a dedicated circuit. Models with 240 VAC power at half the indicated amperage are also offered (International Use Only).*

DIGITS

- AT BAT, BALL, STRIKE and OUT digits are 18" (457 mm) high. All other digits are 15" (381 mm) high.
- Select red, amber, or white LED digits. Scoreboard may instead have mixed LED digit colors (see DD1965467).
- Scoreboard features robust weather-sealed digits (see DD2495646).
- Digits may be dimmed for night viewing.

DISPLAY COLOR

Choose from 150+ colors (from Martin Senour® paint book) at no additional cost.

CONSTRUCTION

Alcoa aluminum alloy 5052 for excellent corrosion resistance

CAPTIONS

- HOME and GUEST captions are 12" (305 mm) high. AT BAT, BALL, STRIKE and OUT captions are 10" (254 mm) high. All other captions are 8" (203 mm) high.
- Standard captions are vinyl, applied to the display face. TIME & PITCH COUNT captions are on a reversible panel.
- Optional TNMCs are 10.6" (269 mm) high.

PRODUCT SAFETY APPROVAL

ETL-listed to UL 48, tested to CSA standards, and CE-labeled

OPERATING TEMPERATURES

- Display: -22° to 122° Fahrenheit (-30° to 50° Celsius)
- Console: 32° to 130° Fahrenheit (0° to 54° Celsius)

WWW.DAKTRONICS.COM E-MAIL: SALES@DAKTRONICS.COM

201 Daktronics Drive, PO Box 5128, Brookings, SD 57006
Phone: 1-800-325-8766 or 605-692-0200 Fax: 605-697-4746

DAKTRONICS BA-2005 PRODUCT SPECIFICATIONS

CONTROL CONSOLE	CONTROL OPTIONS
All Sport® 5000 (see SL-03991)	***Wired (standard):*** Two-pair shielded cable of 22 AWG minimum is required. A cover plate with mounted connector and standard 2" x 4" x 2" (51 mm x 102 mm x 51 mm) outlet box is provided. Connector mates with signal cable from control console.
	Wireless (optional): 2.4 GHz spread spectrum radios feature 64 non-interfering channels and 8 broadcast groups (see SL-04370).
DAK Score & MX-1 (see DD3888368)	CUSTOMER-SUPPLIED mobile device or tablet with DAK Score app installed communicates via **Bluetooth®** wireless technology to an MX-1 Interface Box that controls the scoreboard through 2.4 GHz radio or wired connection.

TIME CLOCK
The two-digit clock can display hours/minutes/seconds. Clock information shifts from hours to minutes to seconds as time counts down.

MOUNTING
Scoreboard is typically mounted on two vertical beams or poles. Hardware to mount scoreboard on two beams is included; hardware for more beams is at additional cost. Standard mounting uses I-beam clamps. Optional mounting method using angle brackets is also offered; maximum beam width is 12" (305 mm) and maximum beam depth is 22" (559 mm). Refer to attached drawings for more information on mounting methods.

SERVICE ACCESS
Digit panels and electronics are serviced from the front of the scoreboard.

GENERAL INFORMATION
Scoreboard provides scoring capabilities for two teams. 100% solid state electronics are housed in an all aluminum cabinet. Scoreboard is shipped in one section. Scoreboard power is to be provided on a dedicated circuit to prevent loss of game information due to failure of another component on the circuit. Specifications and pricing are subject to change without notice.

ADVERTISING/IDENTIFICATION PANELS

Backlit & Non-Backlit:

1'-6" H x 20'-0" W (457 mm, 6.10 m)
2'-0" H x 20'-0" W (610 mm, 6.10 m)
2'-6" H x 20'-0" W (762 mm, 6.10 m)
3'-0" H x 20'-0" W (914 mm, 6.10 m)

For additional non-backlit panel sizes, see SL-03761.

FOR ADDITIONAL INFORMATION
- Installation Specifications: DWG-1157190 (attached)
- Standard I-beam Mounting: DWG-1052565 (attached)
- LVX I-Beam Mounting: DWG-3918361 (attached)
- Optional Pole Mounting: DWG-1048184 (attached)
- Component Locations: DWG-3537170 (attached)
- Architectural Specifications: See SL-05265

OPTIONS & ACCESSORIES
- Scoreboard border striping
- 100+ Pitch Count – an additional digit may be added to the left side of the scoreboard
- Multiple caption and striping colors (see DD2101644)
- Team name caption in place of HOME *
- Team names on changeable panels *
- Programmable Team Name Message Centers (see DD1696958)
- Individual digit protective screens (see SL-04939)
- Protective netting (see DD2690927)
- Optional angle bracket mounting method
- Advertising/identification panels
- Decorative accents
- Electronic message centers and video displays in multiple sizes

** Not available with TNMCs*

Optional 100+ Pitch Count Digit

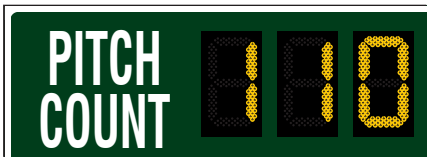

The Bluetooth® word mark and logos are registered trademarks owned by the Bluetooth SIG, Inc. and any use of such marks by Daktronics, Inc. is under license.

WWW.DAKTRONICS.COM E-MAIL: SALES@DAKTRONICS.COM

All Sport® and PanaView® are trademarks of Daktronics, Inc.
Martin Senour® is a registered trademark of its owner.
 Copyright © 2011-2020 Daktronics, Inc.

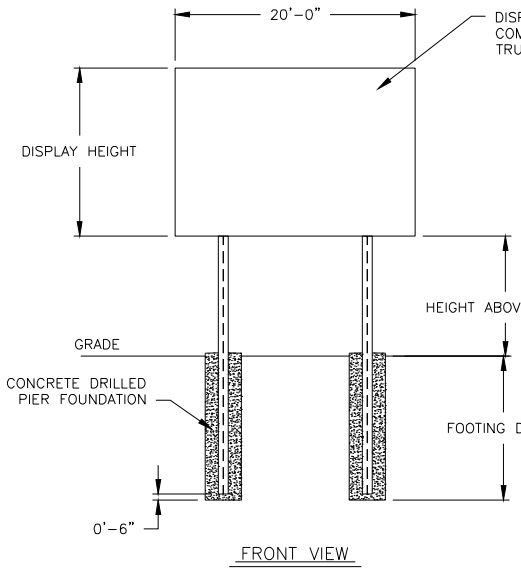

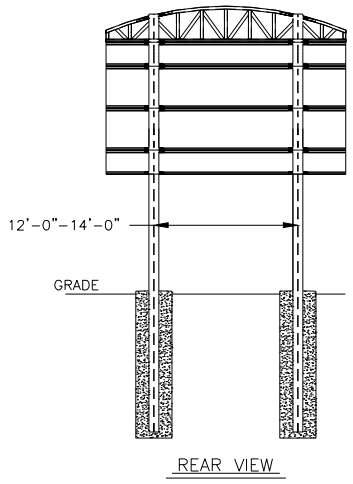

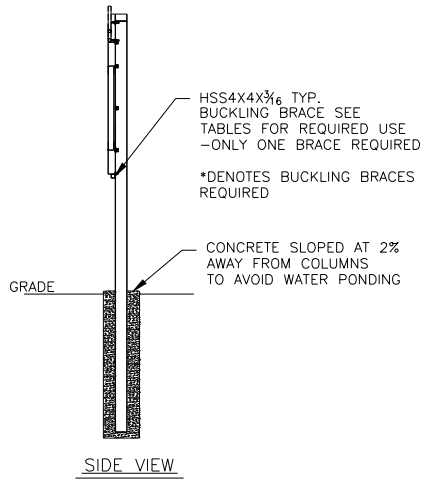

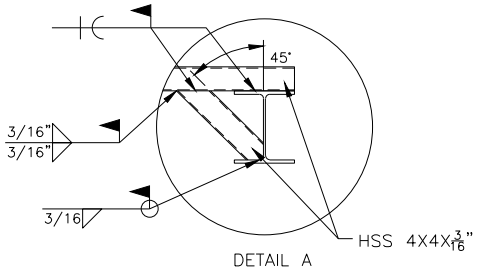

TABLE A – MOUNTING

EXPOSURE B

HEIGHT ABOVE GRADE = 10'						HEIGHT ABOVE GRADE = 15'					
DISPLAY HEIGHT (FT)		DESIGN WIND VELOCITY				DISPLAY HEIGHT (FT)		DESIGN WIND VELOCITY			
		115 MPH	130 MPH	150 MPH	170 MPH			115 MPH	130 MPH	150 MPH	170 MPH
8	COLUMN FOOTING	W8X24 2.0'X8.5'	W8x28 2.0'X9.5'	W8X31 2.0'X10.5'	W12X26* 3.0'X9.5'	8	COLUMN FOOTING	W10X26* 2.0'X9.5'	W10X30* 2.0'X10.5'	W14x34* 3.0'X10.0'	W12X40* 3.0'X11.0'
10	COLUMN FOOTING	W8X31 2.0'X9.5'	W10X26 2.0'X10.5'	W12X26* 3.0'X10.0'	W14X34* 3.0'X11.0'	10	COLUMN FOOTING	W12X30* 3.0'X9.0'	W14x34* 3.0'X10.0'	W12X40* 3.0'X11.0'	W16X45* 3.0'X12.0'
12	COLUMN FOOTING	W10X26* 2.0'X10.5'	W12X26* 3.0'X10.0'	W14X34* 3.0'X11.0'	W16X40* 3.0'X12.0'	12	COLUMN FOOTING	W14X30* 3.0'X10.0'	W12X40* 3.0'X11.0'	W14X43* 3.0'X12.0'	W21X48* 3.0'X13.5'
14	COLUMN FOOTING	W12X26* 3.0'X9.5'	W14X34* 3.0'X10.5'	W16X40* 3.0'X12.0'	W21x44* 3.0'X13.5'	14	COLUMN FOOTING	W14X34* 3.0'X10.5'	W16X40* 3.0'X11.5'	W21X48* 3.0'X13.5'	W21X55* 3.0'X15.5'
16	COLUMN FOOTING	W14X30* 3.0'X10.5'	W18x35* 3.0'X11.5'	W16X40* 3.0'X13.0'	W21X48* 3.0'X15.0'	16	COLUMN FOOTING	W16x40* 3.0'X11.5'	W21X48* 4.0'X11.0'	W18X55* 3.0'X14.5'	W21x68* 4.0'X14.5'
18	COLUMN FOOTING	W14X34* 3.0'X11.0'	W16X40* 3.0'X12.0'	W21X48* 3.0'X14.0	W18X55* 3.0'X16.5'	18	COLUMN FOOTING	W14X48* 3.0'X12.0'	W21x48* 4.0'X12.0'	W21X55* 4.0'X13.5'	W24X68* 4.0'X16.0'
20	COLUMN FOOTING	W16X36* 3.0'X11.5'	W21X44* 3.0'X13.0'	W21X48* 3.0'X15.5'	W21X62* 3.0'X18.5'	20	COLUMN FOOTING	W21X48* 3.0'X13.0'	W21X55* 4.0'X12.5'	W24X68* 4.0'X15.0'	W24X76* 4.0'X17.5'

FOOTING DIMENSIONS = DIAMETER X DEPTH

EXPOSURE C

HEIGHT ABOVE GRADE = 10'				HEIGHT ABOVE GRADE = 15'			
DISPLAY HEIGHT (FT)		DESIGN WIND VELOCITY		DISPLAY HEIGHT (FT)		DESIGN WIND VELOCITY	
		115 MPH	140 MPH			115 MPH	140 MPH
8	COLUMN FOOTING	W12x30 3.0'x8.5'	W14X38 3.0'X10.0'	8	COLUMN FOOTING	W10x39 3.0'X9.5'	W10x49 3.0'X11.0'
10	COLUMN FOOTING	W14X38 3.0'X9.5'	W14X43 3.0'X11.0'	10	COLUMN FOOTING	W10x49 3.0'X10.5'	W12x53 3.0'X12.0'
12	COLUMN FOOTING	W14X43 3.0'X10.0'	W12X53 3.0'X12.0'	12	COLUMN FOOTING	W14x43* 3.0'X11.0'	W18x55* 3.0'X13.5'
14	COLUMN FOOTING	W10X49 3.0'X11.0'	W12X58 3.0'X13.0'	14	COLUMN FOOTING	W21x48* 4.0'X11.0'	W21X62* 4.0'X12.5'
16	COLUMN FOOTING	W16x40* 3.0'X12.0'	W21X48* 3.0'X14.5'	16	COLUMN FOOTING	W18x55* 3.0'X13.0'	W16x67* 3.0'X16.5'
18	COLUMN FOOTING	W21x44* 4.0'X11.0'	W21X55* 4.0'X14.0'	18	COLUMN FOOTING	W21X62* 3.0'X14.5'	W24X68* 4.0'X15.5'
20	COLUMN FOOTING	W21X48* 4.0'X12.0'	W21X62* 4.0'X15.0'	20	COLUMN FOOTING	W16x67* 3.0'X15.5'	W24x84* 4.0'X16.5'

FOOTING DIMENSIONS = DIAMETER X DEPTH

NOTES:

1. FOOTING AND COLUMN SIZES ARE SUGGESTIONS ONLY, PROVIDED TO ASSIST WITH ESTIMATING INSTALLATION COSTS AND ARE NOT INTENDED FOR CONSTRUCTION PURPOSES. THE DESIGN MUST BE CERTIFIED BY A PROFESSIONAL ENGINEER LICENSED IN THE STATE OF THE INSTALLATION BEFORE THEY CAN BE USED FOR FABRICATION Or ERECTION.

2. INTERNATIONAL BUILDING CODE 2012 USED IN DESIGN OF COLUMNS AND FOOTINGS WITH, IMPORTANCE FACTOR=1, Kzt=1.0, Kd=0.85, G=0.85. SEISMIC DESIGN WAS NOT CONSIDERED.

3. FOOTING DIMENSIONS ARE BASED ON ASSUMED SOIL CLASS 4 (ALLOWABLE LATERAL BEARING PRESSURE OF 150 psf).

4. STRUCTURAL STEEL IS GRADE A992 (50 ksi) STEEL. CONCRETE SHALL HAVE A MINNIMUM 28 DAY COMPRESSIVE STRENGTH OF 2500 psi.

5. THE AVERAGE DISPLAY WEIGHT FOR A LAYOUT CAN NOT EXCEED 8 PSF.

6. DAKTRONICS INC. IS NOT RESPONSIBLE FOR STRUCTURES DESIGNED AND INSTALLED BY OTHERS.

7. LOCAL BUILDING OFFICIALS SHOULD BE CONTACTED TO DETERMINE THE WIND SPEED AND EXPOSURE CATEGORY FOR THE PROPOSED SIGN LOCATION. THE EXPOSURE CATEGORY C IS DEFINED AS:

EXPOSURE B – URBAN AND SUBURBAN AREAS, OR OTHER TERRAIN WITH NUMEROUS SPACED OBSTRUCTIONS HAVING THE SIZE OF SINGLE-FAMILY DWELLINGS OR LARGER. THESE CONDITIONS MUST PREVAIL FOR A DISTANCE FROM THE SIGN OF AT LEAST 2,600 ft OR 20 TIMES THE SIGN HEIGHT, WHICHEVER IS GREATER

EXPOSURE C – OPEN TERRAIN WITH SCATTERED OBSTRUCTIONS HAVING HEIGHTS GENERALLY LESS THAN 30 FT. THIS CATEGORY INCLUDES FLAT OPEN COUNTRY, GRASSLANDS, AND ALL WATER SURFACES IN HURRICANE PRONE REGIONS.

8. FOR SPECIFIC PRODUCT DETAILS ON WEIGHT, MOUNTING, ETC. REFER TO THE INDIVIDUAL PRODUCT SPECIFICATION SHEETS.

NOTE:
-REFER TO NOTE 7 FOR EXPOSURE CATEGORY DEFINITIONS.

REV	DATE:		BY:
02	20 OCT 15	UPDATED WIDE FLANGE SIZES UPDATED FOUNDATION SIZES NOTED WHICH DISPLAYS NEEDED BRACE	AMP
01	23 JUL 14	UPDATED CLAMPS IN REAR AND SIDE VIEWS AND ADDED 170 MPH WIND SPEC COLUMN	TJT

DAKTRONICS, INC.
BROOKINGS, SD 57006
DO NOT SCALE DRAWING

THE CONCEPTS EXPRESSED AND DETAILS SHOWN ON THIS DRAWING ARE CONFIDENTIAL AND PROPRIETARY. DO NOT REPRODUCE BY ANY MEANS WITHOUT THE EXPRESSED WRITTEN CONSENT OF DAKTRONICS, INC. COPYRIGHT 2011 DAKTRONICS, INC.

PROJ: OUTDOOR SCOREBOARD INSTALLATION
TITLE: 20' WIDTH SCOREBOARD INSTALLATION SPECS
DESIGN: RSCHWAR | DRAWN: RSCHWAR | DATE: 27 NOV 13
SCALE: 1/16"=1'

SHEET	REV	JOB NO:	FUNC-TYPE-SIZE	
	02	P1647	E-10-A	1157190

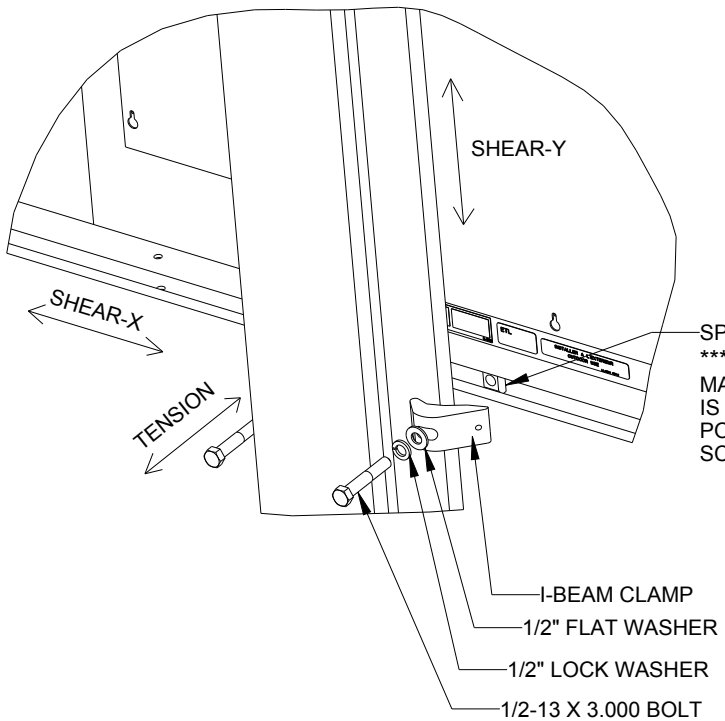

EXPLODED REAR ISOMETRIC VIEW

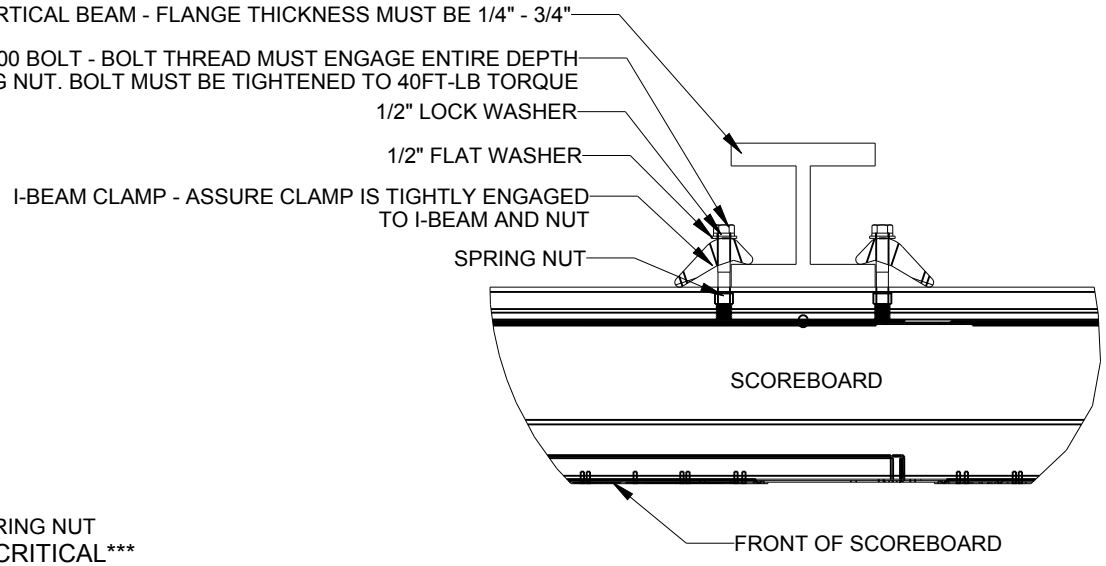

TOP VIEW

CRITICAL
DO NOT USE ANY LUBRICANT
ON ANY MOUNTING HARDWARE
OR WARRANTY WILL BE VOIDED

STANDARD MOUNTING METHOD

MOUNTING INSTRUCTIONS:
1. PLACE SPRING NUTS INTO SCOREBOARD CHANNEL IN APPROXIMATE LOCATION OF VERTICAL BEAMS
2. LIFT SCOREBOARD INTO POSITION
3. MAKE SURE THE 1/2-13 BOLTS ARE AS CLOSE TO THE I-BEAM FLANGES AS POSSIBLE
4. WHEN SCOREBOARD IS ADJUSTED TO FINAL DESIRED POSITION, TIGHTEN BOLTS FIRMLY
5. IF FLANGE THICKNESS IS MORE THAN 3/4" THICK LONGER BOLTS WILL BE REQUIRED AT THE CUSTOMER'S EXPENSE.

STRUCTURAL NOTES

ALLOWABLE CAPACITY PER EACH CLAMP:
SHEAR = 160 LBS
TENSION = 2300 LBS

SHEAR AND TENSION LOAD DIRECTION ARE AS INDICATED ON REAR ISOMETRIC VIEW

REV	DATE:		BY:	
05	22 DEC 15	PER EC-22871; ADDED LUBRICANT NOTE	PJS 18704	
04	06 JAN 14	ADDED ALLOWABLE TENSION AND SHEAR CAPACITY DETAILS	JAVA	
03	23 OCT 13	PER EC-12382; CHANGED BOLT TORQUE FROM 30 FT-LB TO 40 FT-LB	NJM	
02	07 MAR 12	ADDED STANDARD MOUNTING METHODS NOTES	KDD	
01	21 FEB 12	CHANGED ROCKER TO I-BEAM	KDD	

DAKTRONICS

THE CONCEPTS EXPRESSED AND DETAILS SHOWN ON THIS DRAWING ARE CONFIDENTIAL AND PROPRIETARY. DO NOT REPRODUCE BY ANY MEANS WITHOUT THE EXPRESS WRITTEN CONSENT OF DAKTRONICS, INC. OR ITS WHOLLY OWNED SUBSIDIARIES. COPYRIGHT 2016 DAKTRONICS, INC. (USA)

THIRD ANGLE PROJECTION

PROJECT:	OUTDOOR SCOREBOARD		
TITLE:	P1647; I-BEAM CLAMP MOUNTING		
DATE: 22-DEC-15	DIM UNITS: INCHES [MILLIMETERS]	SHEET 1 OF 1	REV 05
SCALE: 1/8	DO NOT SCALE DRAWING		
DESIGN: MCARSRU	JOB NO. P1647	FUNC - TYPE - SIZE E - 07 - A	1052565
DRAWN: MCARSRU			

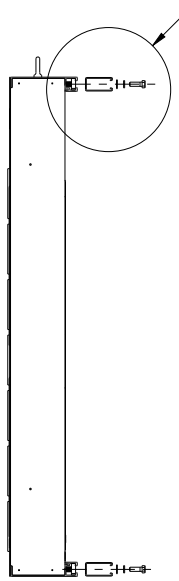

EXPLODED SIDE VIEW
UNISTRUT ATTACHMENT
SCALE 1/15

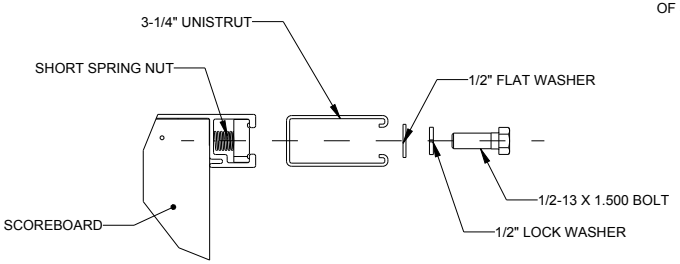

DETAIL A
SCALE 1/4

RECOMMENDED METHOD OF INSTALLATION:
- INSTALL 1 1/2" BOLT, 1/2" LOCK WASHER, 1/2" FLAT WASHER USING SHALLOW SOCKET WITH EXTENSION.
- ENTER FRO MSIDE OF UNISTRUT SECURING INSIDE BOLTS FIRST AND MOVING OUTWARD.

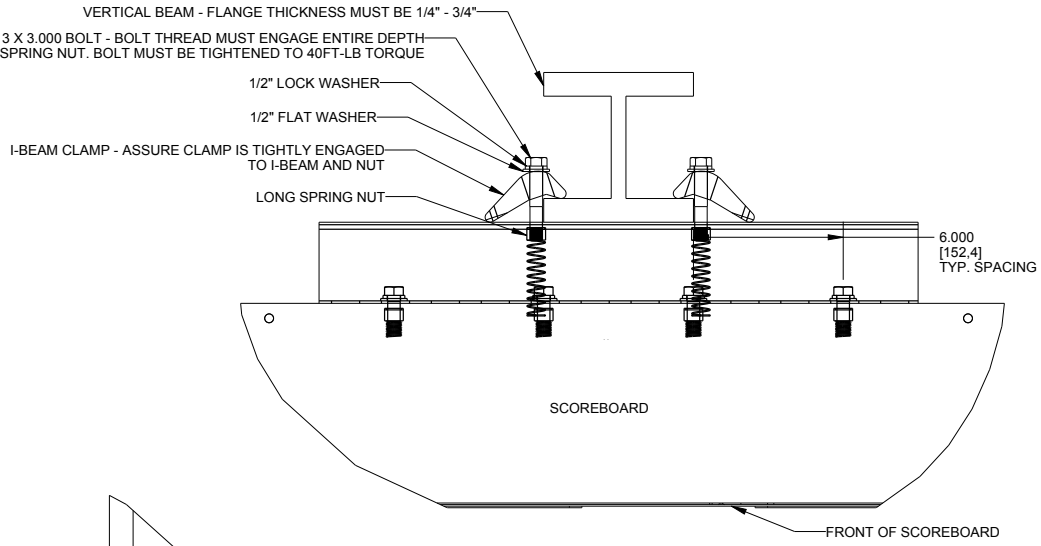

TOP VIEW

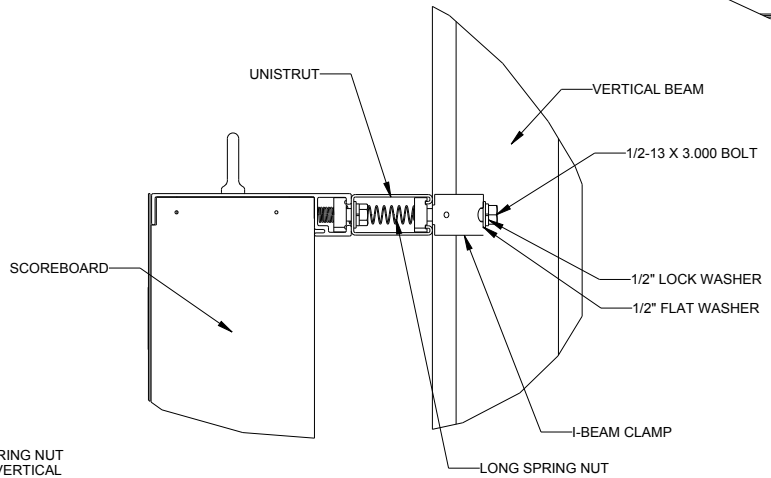

SIDE VIEW
SCOREBOARD ATTACHEMENT

STRUCTURAL NOTES

ALLOWABLE CAPACITY PER
COLUMN CONNECTION:
SHEAR = 185 LBS
TENSION = 2400 LBS

SHEAR AND TENSION LOAD
DIRECTION ARE AS INDICATED ON
REAR ISOMETRIC VIEW

STANDARD MOUNTING METHOD

MOUNTING INSTRUCTIONS:
1. PLACE SPRING NUTS INTO SCOREBOARD CHANNEL IN LOCATIONS SHOWN IN TOP VIEW
2. PLACE SPRING NUTS IN UNISTRUT IN APPROXIMATE LOCATION OF VERTICAL BEAMS
2. LIFT SCOREBOARD INTO POSITION
3. MAKE SURE THE 1/2-13 BOLTS ARE AS CLOSE TO THE I-BEAM FLANGES AS POSSIBLE
4. WHEN SCOREBOARD IS ADJUSTED TO FINAL DESIRED POSITION, TIGHTEN BOLTS FIRMLY
5. IF FLANGE THICKNESS IS MORE THAN 3/4" THICK LONGER BOLTS WILL BE REQUIRED AT THE CUSTOMER'S EXPENSE.

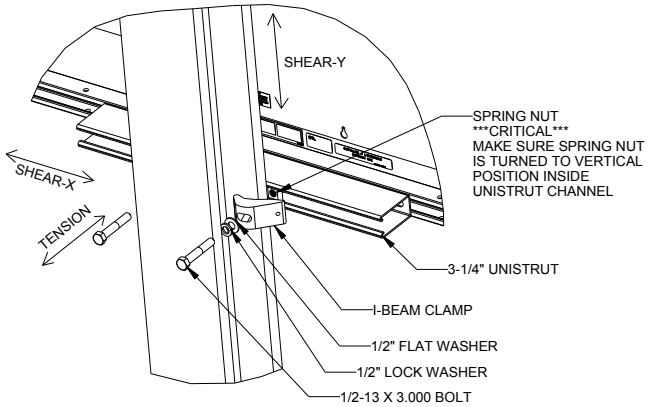

EXPLODED REAR ROTATED VIEW

SCALE 1/8

CRITICAL
DO NOT USE ANY LUBRICANT
ON ANY MOUNTING HARDWARE
OR WARRANTY WILL BE VOIDED

REV	DATE:		BY:

THE CONCEPTS EXPRESSED AND DETAILS SHOWN ON THIS DRAWING ARE CONFIDENTIAL AND PROPRIETARY. DO NOT REPRODUCE BY ANY MEANS WITHOUT THE EXPRESS WRITTEN CONSENT OF DAKTRONICS, INC. OR ITS WHOLLY OWNED SUBSIDIARIES. COPYRIGHT 2018 DAKTRONICS, INC. (USA)

DAKTRONICS

THIRD ANGLE PROJECTION

PROJECT:	OUTDOOR SCOREBOARD		
TITLE:	P1647; LVX I-BEAM CLAMP MOUNTING		
DATE: 18-MAY-18	DIM UNITS: INCHES [MILLIMETERS]	SHEET	REV
SCALE: 1/5	DO NOT SCALE DRAWING	1 OF 1	00
DESIGN: KDRAGT	JOB NO.	FUNC - TYPE - SIZE	
DRAWN: KDRAGT	P1647	E - 07 - B	3918361

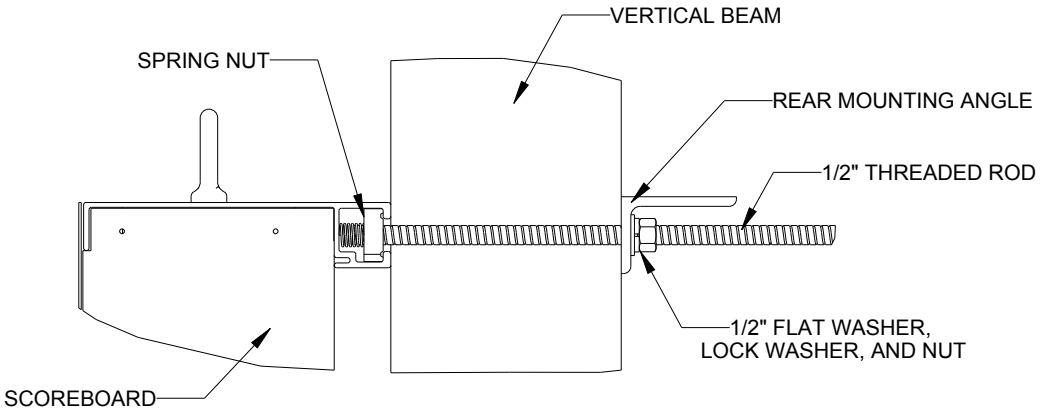

SIDE VIEW

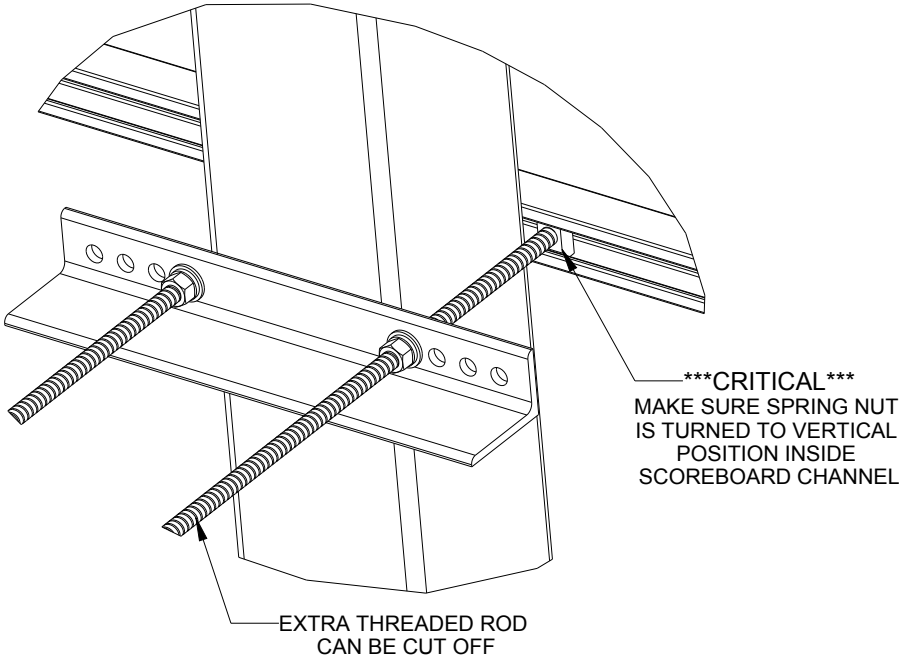

REAR ISOMETRIC VIEW

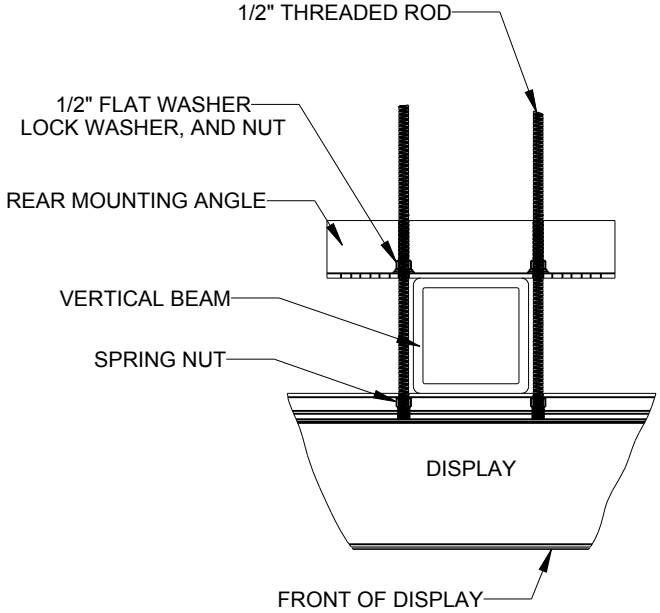

TOP VIEW
SCALE 1/10

CRITICAL
DO NOT USE ANY LUBRICANT
ON ANY MOUNTING HARDWARE
OR WARRANTY WILL BE VOIDED

STRUCTURAL NOTES:
- BOLT TORQUE: 30 FT-LB

NOTES:
- THREADED RODS RUN ALONG BOTH SIDES OF BEAM
- RODS DO NOT PASS THROUGH THE FLANGES OF THE BEAM
- NO DRILLING NECESSARY
- MAKE SURE SPRING NUT IS PERPENDICULAR TO CHANNEL OPENING ON SCOREBOARD

REV	DATE:		BY:	
04	22 DEC 15	PER EC-22871; ADDED LUBRICANT WARNING	PJS 18704	
03	03 JULY 13	ADDED STRUCTURAL NOTE	TTF	
02	20 SEP 12	PER EC-7114; REMOVED CHAMFER FROM 0M-133259	LMG	
01	06 OCT 11	REPLACED VERTICAL I-BEAM WITH 6" X 6" SQUARE TUBE	JAVA	

DAKTRONICS

THE CONCEPTS EXPRESSED AND DETAILS SHOWN ON THIS DRAWING ARE CONFIDENTIAL AND PROPRIETARY. DO NOT REPRODUCE BY ANY MEANS WITHOUT THE EXPRESS WRITTEN CONSENT OF DAKTRONICS, INC. OR ITS WHOLLY OWNED SUBSIDIARIES. COPYRIGHT 2016 DAKTRONICS, INC. (USA)

THIRD ANGLE PROJECTION

PROJECT:	OUTDOOR SCOREBOARDS		
TITLE:	P1647; POLE MOUNTING OPTIONS		
DATE: 22-DEC-15	DIM UNITS: INCHES [MILLIMETERS]	SHEET 1 OF 1	REV 04
SCALE: 1/5	DO NOT SCALE DRAWING		
DESIGN: DOPPELT	JOB NO.	FUNC - TYPE - SIZE	1048184
DRAWN: DOPPELT	P1647	E - 10 - A	

BA-2005-R/A/W

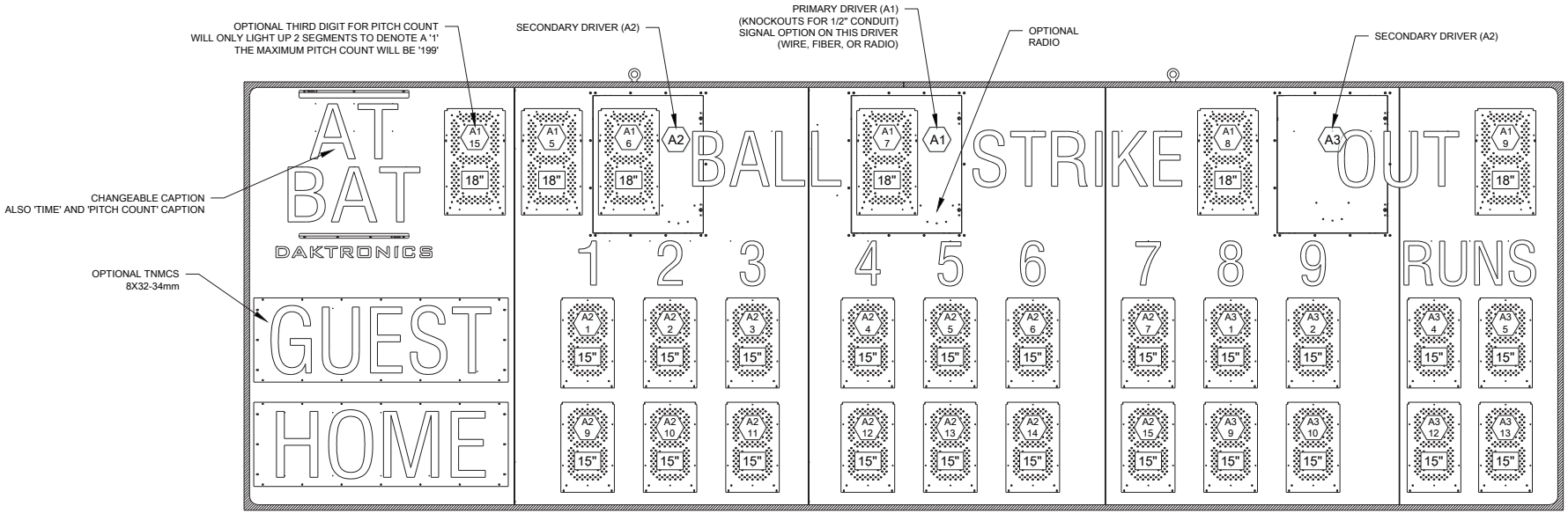

FRONT VIEW

NOTES:

A1 = DRIVER NUMBER

4H =SEGMENT DESIGNATION

A1 1 = DIGIT DESIGNATION

X" = DIGIT SIZE

REV	DATE:		BY:
01	24 AUG 20	PER CN-108526 REMOVED LABELS TO MOVE TO NEW STANDARD	TAN

THE CONCEPTS EXPRESSED AND DETAILS SHOWN ON THIS DRAWING ARE CONFIDENTIAL AND PROPRIETARY. DO NOT REPRODUCE BY ANY MEANS WITHOUT THE EXPRESS WRITTEN CONSENT OF DAKTRONICS, INC. OR ITS WHOLLY OWNED SUBSIDIARIES. COPYRIGHT 2017 DAKTRONICS, INC. (USA)

THIRD ANGLE PROJECTION

PROJECT:	OUTDOOR LED SCOREBOARDS		
TITLE:	COMPONENT LOCATION; BA-2005-R/A/W		
DATE: 04 JAN 17	DIM UNITS: INCHES [MILLIMETERS]	SHEET	REV 01
SCALE: 1 = 20	DO NOT SCALE DRAWING		
DESIGN: PSCHROE	JOB NO. P1647	FUNC - TYPE - SIZE R - 08 - B	3537170
DRAWN: PSCHROE			

Project		Catalog #		Type	
Prepared by		Notes		Date	

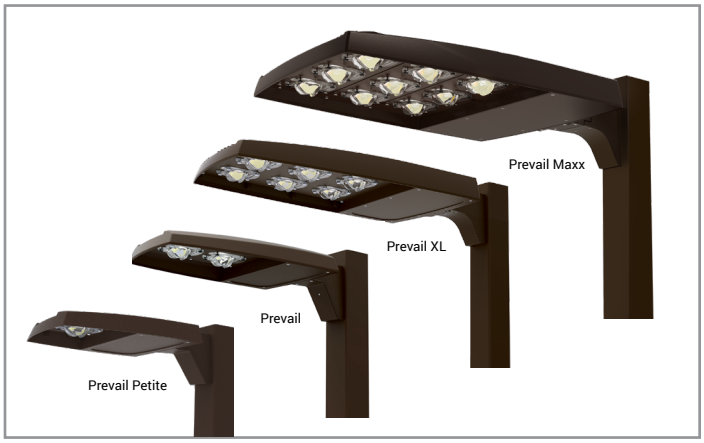

Lumark

Prevail LED

Area / Site Luminaire

Product Features

LumenSafe Technology · BAA · Light ARchitect™ · FADC

Interactive Menu

- Ordering Information page 2
- Mounting Details page 3, 4
- Optical Configurations page 5
- Product Specifications page 5
- Energy and Performance Data page 6, 7
- Control Options page 8

Product Certifications

ISO Systems Certified · UL Certified · DLC Listed [1] · DLC Listed Premium [1] · FC Class A CAN ICES-005 · RoHS Compliant · IP66 · ida Dark Sky Approved [2] · 5 Year Limited Warranty

Quick Facts

- Lumen packages range from 4,800 - 84,000 lumens (35W - 588W)
- Replaces 70W up to 1,000W HID equivalents
- Efficacies up to 160 lumens per watt
- Energy and maintenance savings up to 85% versus HID solutions
- Standard universal quick mount arm with universal drill pattern

Connected Systems

- WaveLinx PRO Wireless
- WaveLinx LITE Wireless

Dimensional Details

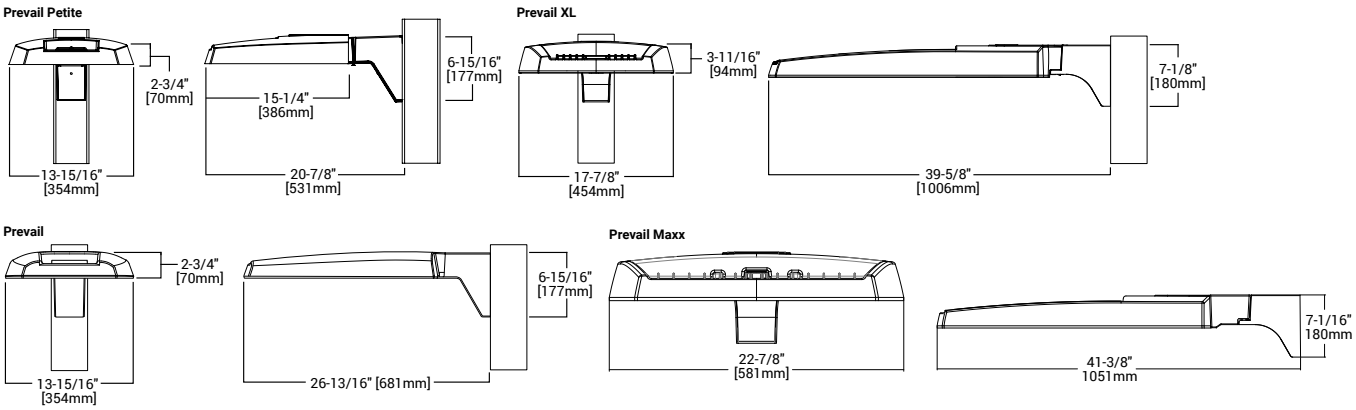

NOTES:
1. Visit https://www.designlights.org/search/ to confirm qualification. Not all product variations are DLC qualified.
2. IDA Certified for 3000K CCT and warmer only.

Ordering Information

SAMPLE NUMBER: **PRV-XL-C75-D-UNV-T4-SA-BZ**

Product Family [1, 2]	Light Engine [4]	Color Temperature	Driver	Voltage	Distribution	Mounting	Color
PRV-P=Prevail Petite **BAA-PRV-P**=Prevail Petite BAA Compliant [3] **TAA-PRV-P**=Prevail Petite TAA Compliant [3]	**C10**=(1 LED) 4,900 Nominal Lumens **C15**=(1 LED) 6,900 Nominal Lumens **C20**=(1 LED) 9,800 Nominal Lumens **C25**=(1 LED) 11,800 Nominal Lumens	**740**=70CRI, 4000K **727**=70CRI, 2700K **730**=70CRI, 3000K **750**=70CRI, 5000K **8540**=85CRI, 4000K	**D**=Dimming (0-10V)	**UNV**=Universal (120-277V) **H**=High Voltage, 347-480V **8**=480V [5] **9**=347V **DV**=DuraVolt (277-480V) [5, 6]	**T2**=Type II **T3**=Type III **T4**=Type IV **T5**=Type V	**SA**=QM Standard Versatile Arm **MA**=QM Mast Arm **FMA**= Fixed Mast Arm [27] **WM**=QM Wall Mount Arm **ADJA-WM**=Adjustable Arm–Wall Mount [29] **ADJA**=Adjustable Arm–Pole Mount [29] **ADJS**=Adjustable Arm–Slipfitter, 3" vertical tenon [29] **SP2**=Adjustable Arm–Slipfitter, 2 3/8" vertical tenon [27, 29]	**BZ**=Bronze **AP**=Grey **BK**=Black **DP**=Dark Platinum **GM**=Graphite Metallic **WH**=White
PRV=Prevail **BAA-PRV**=Prevail BAA Compliant [3] **TAA-PRV**=Prevail TAA Compliant [3]	**C15**=(1 LED) 7,100 Nominal Lumens **C25**=(2 LEDs) 13,100 Nominal Lumens **C40**=(2 LEDs) 17,100 Nominal Lumens **C60**=(2 LEDs) 20,000 Nominal Lumens						
PRV-XL=Prevail XL **BAA-PRV-XL**=Prevail XL BAA Compliant [3] **TAA-PRV-XL**=Prevail XL TAA Compliant [3]	**C75**=(4 LED) 26,100 Nominal Lumens **C100**=(4 LED) 31,000 Nominal Lumens **C125**=(4 LED) 36,000 Nominal Lumens **C150**=(6 LED) 41,100 Nominal Lumens **C175**=(6 LED) 48,600 Nominal Lumens						
PRV-M=Prevail Maxx **BAA-PRV-M**=Prevail Maxx BAA Compliant[3] **TAA-PRV-M**=Prevail MaxxTAA Compliant [3]	**C200**=(9 LED) 48,000 Nominal Lumens **C225**=(9 LED) 56,000 Nominal Lumens **C250**=(9 LED) 65,000 Nominal Lumens **C275**=(9 LED) 73,000 Nominal Lumens						

Options (Add as Suffix)

7030=70 CRI / 3000K CCT [7]
7050=70 CRI / 5000K CCT [7]
CC=Coastal Construction finish [10]
HSS=House Side Shield [8]
L90=Optics Rotated 90° Left
R90=Optics Rotated 90° Right
10K=10kV/10kA UL 1449 Fused Surge Protective Device
20MSP=20kV MOV Surge Protective Device
20K=20kV UL 1449 Fused Surge Protective Device
HA=50°C High Ambient Temperature [9]
PR=NEMA 3-PIN Twistlock Photocontrol Receptacle [11]
PR7=NEMA 7-PIN Twistlock Photocontrol Receptacle [11]
FADC=Field Adjustable Dimming Controller [30]
MS/DIM-L08=Dimming Motion and Daylight Sensor, IR Remote Programmable, < 8' Mounting Height [12, 13]
MS/DIM-L20=Dimming Motion and Daylight Sensor, IR Remote Programmable, 8' - 20' Mounting Height [12, 13]
MS/DIM-L40=Dimming Motion and Daylight Sensor, IR Remote Programmable, 21' - 40' Mounting [12, 13]
SPB1=Dimming Motion and Daylight Sensor, Bluetooth Programmable, < 8' Mounting Height [12, 14]
SPB2=Dimming Motion and Daylight Sensor, Bluetooth Programmable, 8' - 20' Mounting Height [12, 14]
SPB4=Dimming Motion and Daylight Sensor, Bluetooth Programmable, 21' - 40' Mounting Height [12, 14, 27, 28]
WPS2XX=WaveLinx Pro, SR Driver, Dimming Motion and Daylight, WAC Programmable, 7' - 15' Mounting [12, 15, 16, 17]
WPS4XX=WaveLinx Pro, SR Driver, Dimming Motion and Daylight, WAC Programmable, 15' - 40' Mounting [12, 15, 16, 17]
WLS2XX=WaveLinx Lite, SR Driver, Dimming Motion and Daylight, Bluetooth Programmable, 7' - 15' Mounting [12, 15, 16, 17]
WLS4XX=WaveLinx Lite, SR Driver, Dimming Motion and Daylight, Bluetooth Programmable, 15' - 40' Mounting [12, 15, 16, 17]
(See Table Below)=LumenSafe Integrated Network Security Camera [18, 19]

Accessories (Order Separately) [20, 21]

PRVSA-XX=Standard Arm Mounting Kit [22]
PRVMA-XX=Mast Arm Mounting Kit [22]
PRVWM-XX=Wall Mount Kit [22]
PRV-ADJA-XX=Adjustable Arm - Pole Mount Kit [22]
PRV-ADJS-XX=Adjustable Arm - Slipfitter Kit [22]
PRV-ADJA-WM-XX=Adjustable Arm - Wall Mount Kit [22]
PRVXLSA-XX=Standard Arm Mounting Kit [28]
PRVXLMA-XX=Mast Arm Mounting Kit [28]
PRVXLWM-XX=Wall Mount Kit [28]
PRV-XL-ADJA-XX=Adjustable Arm - Pole Mount Kit [28]
PRV-XL-ADJS-XX=Adjustable Arm - Slipfitter Kit [28]
PRV-XL-ADJA-WM-XX=Adjustable Arm - Wall Mount Kit [28]
PRV-M-ADJA-XX=Adjustable Arm - Pole Mount Kit [27]
PRV-M-ADJS-XX=Adjustable Arm - Slipfitter Kit [27]
PRV-M-ADJA-WM-XX=Adjustable Arm - Wall Mount Kit [27]
MA1010-XX=Single Tenon Adapter for 3-1/2" O.D. Tenon
MA1011-XX=2@180° Tenon Adapter for 3-1/2" O.D. Tenon
MA1017-XX=Single Tenon Adapter for 2-3/8" O.D. Tenon
MA1018-XX=2@180° Tenon Adapter for 2-3/8" O.D. Tenon
SRA238=Tenon Adapter from 3" to 2-3/8"
PRV/COB-FDV=Full Drop Visor [23]
PRVXL/COB-FDV=Full Drop Visor [18]
HS/VERD=House Side Shield Kit [8, 24]
VGS-F/B= Vertical Glare Shield Kit, Front/Back [24]
VGS-SIDE=Vertical Glare Shield Kit, Side [24]
OA/RA1013=Photocontrol Shorting Cap
OA/RA1014=NEMA Photocontrol - 120V
OA/RA1016=NEMA Photocontrol - Multi-Tap 105-285V
OA/RA1201=NEMA Photocontrol - 347V
OA/RA1027=NEMA Photocontrol - 480V
FSIR-100=Wireless Configuration Tool for Occupancy Sensor [25]
WOLC-7P-10A=WaveLinx Outdoor Control Module (7-PIN) [26]

NOTES:
1. DesignLights Consortium® Qualified. Refer to www.designlights.org Qualified Products List under Family Models for details.
2. Customer is responsible for engineering analysis to confirm pole and fixture compatibility for alll applications. Refer to installation instructions IB500002EN and pole white paper WP513001EN for additional support information.
3. Only product configurations with these designated prefixes are built to be compliant with the Buy American Act of 1933 (BAA) or Trade Agreements Act of 1979 (TAA), respectively. Please refer to DOMESTIC PREFERENCES website for more information. Components shipped separately may be separately analyzed under domestic preference requirements.
4. Standard 4000K CCT and 70CRI.
5. 480V not to be used with ungrounded or impedance grounded systems.
6. DuraVolt drivers feature added protection from power quality issues such as loss of neutral, transients and voltage fluctuations. Visit www.signify.com/duravolt for more information.
7. Use dedicated IES files on product website for non-standard CCTs.
8. House Side Shield not suitable with T5 distribution. Not available with PRV-C60 lumen package.
9. Not available with PRV-C60 lumen package. Not available with PRV-P-C25 lumen package.
10. Coastal construction finish salt spray tested to over 5,000-hours per ASTM B117, with a scribe rating of 9 per ASTM D1654.
11. If DuraVolt (DV) is specified, use a photocontrol that matches the input voltage used.
12. Controls system is not available in combination with a photocontrol receptacle (PR & PER7) or another controls system (MS or SPB). Option not available with DuraVolt (DV) voltage option.
13. Utilizes the Wattstopper sensor FSP-211. Sensor color white unless specified otherwise via PDR. To field-configure, order FSIR-100 accessory separately.
14. Utilizes the Wattstopper sensor FSP-3XX series. Sensor color determined by product finish. See Sensor Color Reference Table. Field-configures via mobile application. See Controls section for details.
15. Sensor passive infrared (PIR) may be overly sensitive when operating below -20°C (-4°F).
16. For the device to be field-configurable, requires WAC Gateway components WAC-PoE and WPOE-120 in appropriate quantities. Only compatible with WaveLinx system and software and requires system components to be installed for operation. See website for more Wavelinx application information.
17. Replace XX with sensor color (WH, BZ, or BK).
18. Only available in PRV-XL configurations C75, C100, C125, C150, or C175.
19. Not available with 347V, 480V, DV, or HA options. Consult LumenSafe system product pages for additional details and compatability information.
20. Replace XX with paint color.
21. For BAA or TAA requirements, Accessories sold separately will be separately analyzed under domestic preference requirements. Consult factory for further information.
22. Not for use with PRV-XL or PRV-M configurations.
23. Only for use with PRV. Not applicable to PRV-M, PRV-XL, or PRV-P.
24. Must order one per optic/LED when ordering as a field-installable accessory (1, 2, 4, 6 or 9).
25. This tool enables adjustment to Motion Sensor (MS) parameters including high and low modes, sensitivity, time delay, cutoff and more. Consult your lighting representative for more information.
26. Requires 7-PIN NEMA twistlock photocontrol receptacle (PR & PER7) option. The WOLC-7 cannot be used in conjunction with other controls systems (MS or LWR). Operates on 120-347V input voltages.
27. Only for use with PRV-M configurations.
28. Only for use with PRV-XL configurations.
29. Fixed for PRV-M.
30. Cannot be used with PR7 or other motion response control options

LumenSafe Integrated Network Security Camera Technology Options (Add as Suffix)

Product Family	Camera Type	Data Backhaul		
L=LumenSafe Technology	**H**=Dome Camera, High Res **Z**=Dome Camera, Remote PTZ	**C**=Cellular, Customer Installed SIM Card **A**=Cellular, Factory Installed AT&T SIM Card	**V**=Cellular, Factory Installed Verizon SIM Card **S**=Cellular, Factory Installed Sprint SIM Card	**E**=Ethernet Networking

Stock Ordering Information

Product Family [1]	Light Engine	Voltage	Distribution
PRVS=Prevail	**C15**=(1 LED) 7,100 Nominal Lumens **C25**=(2 LEDs) 13,100 Nominal Lumens **C40**=(2 LEDs) 17,100 Nominal Lumens **C60**=(2 LEDs) 20,000 Nominal Lumens	**UNV**=Universal (120-277V) **347**=347V [2]	**T3**=Type III **T4**=Type IV
PRVS-XL=Prevail XL	**C75**=(4 LED) 26,100 Nominal Lumens **C100**=(4 LED) 31,000 Nominal Lumens **C125**=(4 LED) 36,000 Nominal Lumens **C150**=(6 LED) 41,100 Nominal Lumens **C175**=(6 LED) 48,600 Nominal Lumens		

NOTES:
1. All stock configurations are standard 4000K/70CRI, bronze finish, and include the standard versatile mounting arm.
2. Only available in PRVS configurations C15, C25, C40 or C60.

Mounting Details

SA=QM Pole Mount Arm (PRV & PRV-P)

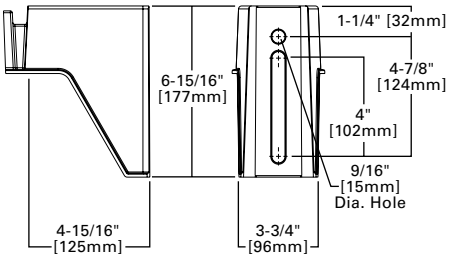

SA=QM Pole Mount Arm (PRV-XL)

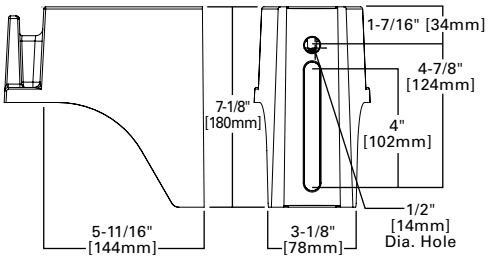

WM=QM Wall Mount Arm (PRV & PRV-P)

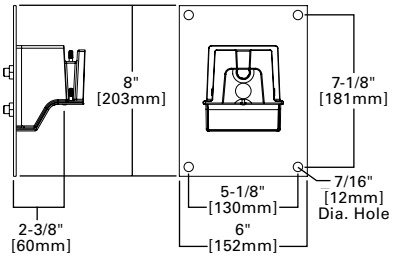

WM=QM Wall Mount Arm (PRV-XL)

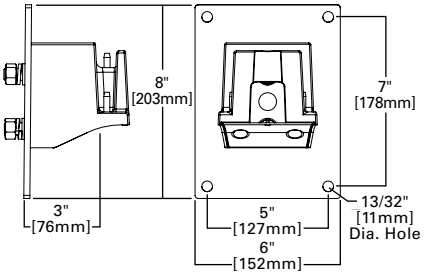

MA=QM Mast Arm (PRV & PRV-P)

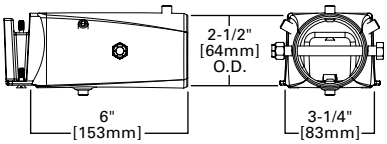

MA=QM Mast Arm (PRV-XL)

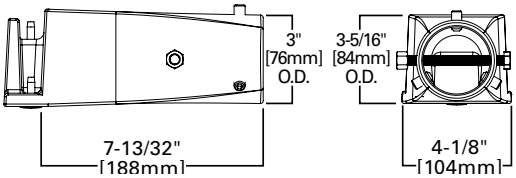

ADJA=Adjustable Arm Pole Mount (PRV & PRV-P)

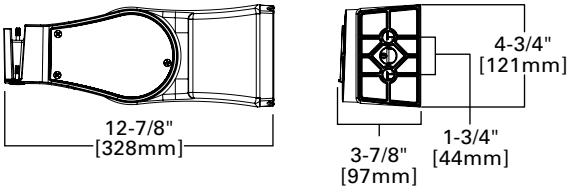

ADJA=Adjustable Arm Pole Mount (PRV-XL)

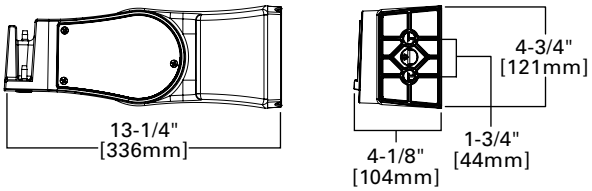

ADJA-WM=Adjustable Arm Wall Mount (PRV & PRV-P)

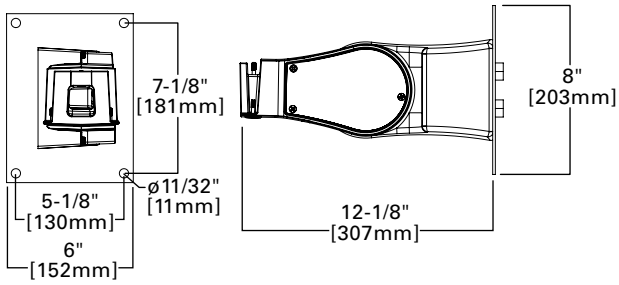

ADJA-WM=Adjustable Arm Wall Mount (PRV-XL)

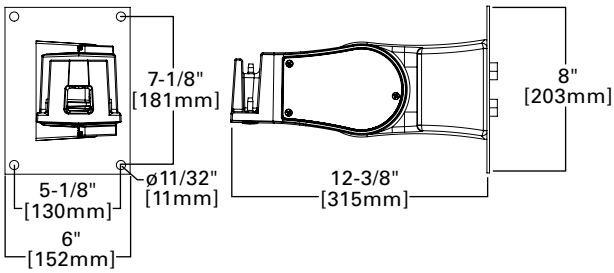

ADJS=Adjustable Slipfitter 3 (PRV & PRV-P)

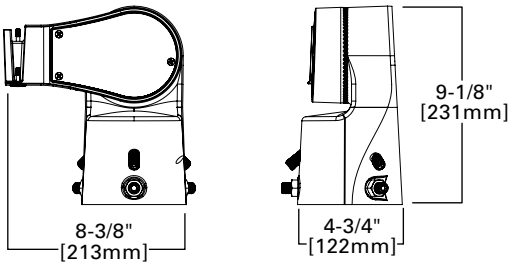

ADJS=Adjustable Slipfitter 3 (PRV-XL)

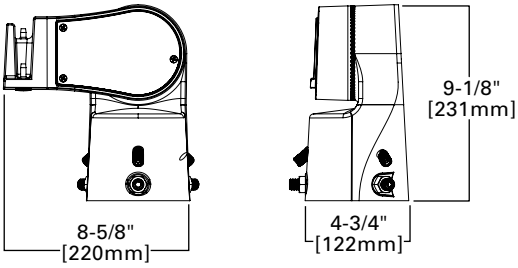

Mounting Details

SA=QM Pole Mount Arm (PRV-M)

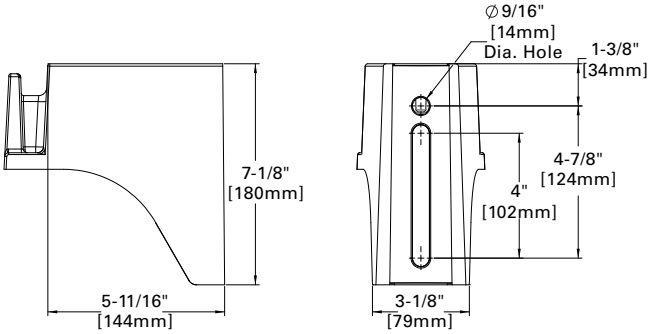

Versatile Mount System

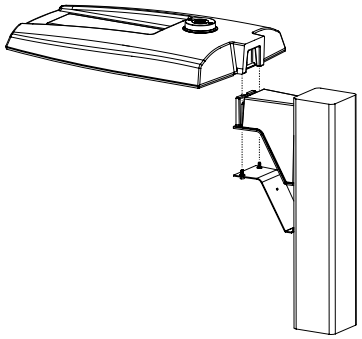

WM=QM Wall Mount Arm (PRV-M)

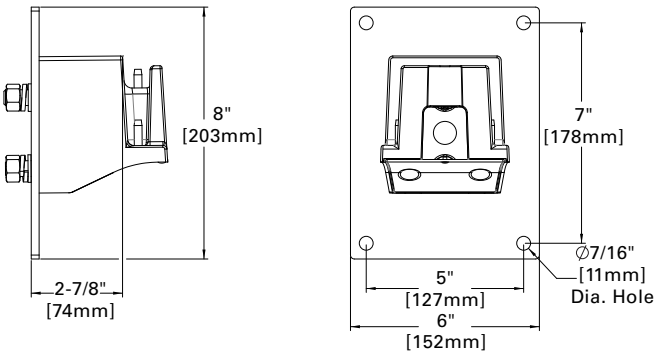

ADJS=Adjustable Slipfitter (PRV-M)

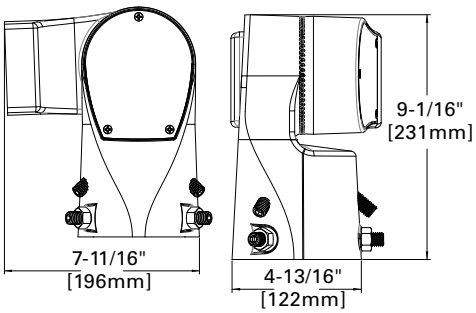

MA=QM Mast Arm (PRV-M)

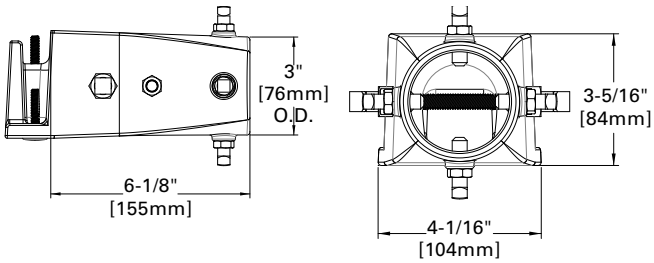

SP2=Adjustable Slipfitter 2-3/8" (PRV-M)

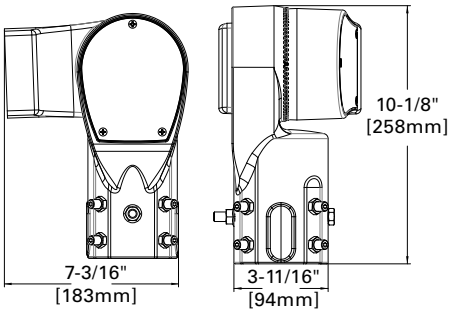

FMA=Fixed Mast Arm (PRV-M)

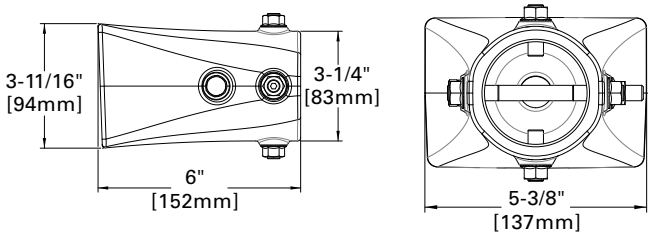

DM=Direct Pole Mount Arm (PRV-M)

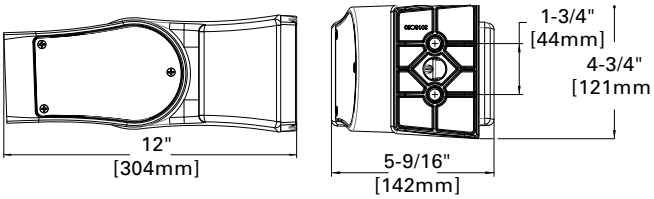

Mounting Details

Mounting Configurations and EPAs

NOTE: For 2 PRV's mounted at 90°, requires minimum 3" square or 4" round pole for fixture clearance. For 2 PRV-XL's mounted at 90°, requires minimum 4" square or round pole for fixture clearance. Customer is responsible for engineering analysis to confirm pole and fixture compatibility for applications.

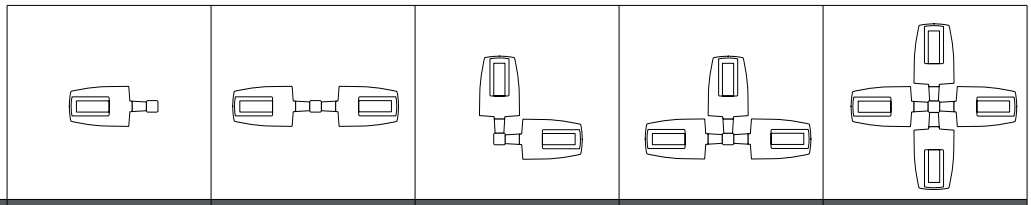

Housing Size	Tilt Angle (Degrees)	Arm Mount Single	Arm Mount 2 @ 180°	Arm Mount 2 @ 90°	Arm Mount 3 @ 90°	Arm Mount 4 @ 90°
Prevail Petite	0°	0.54	1.08	0.84	1.38	1.38
	60°	1.68	1.85	2.42	3.15	3.30
Prevail	0°	0.92	1.35	1.42	1.63	1.63
	60°	2.20	2.40	3.05	3.88	4.07
	60° + Full Drop Visor	2.20	2.40	3.25	4.28	4.47
Prevail XL	0°	1.12	2.25	2.13	2.52	2.52
	60°	3.99	4.30	5.26	6.51	6.79
	60° + Full Drop Visor	3.99	4.30	5.59	7.17	7.49
Prevail Maxx	0°	1.28	2.56	1.7	2.69	2.69
	60°	5.09	5.52	6.34	7.49	7.81

Optical Configurations

PRV-P-C10/C15/C20/C25
(4,900/6,900/9,800/11,800 Nominal Lumens)

PRV-C15
(7,100 Nominal Lumens)

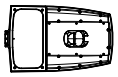

PRV-C25/C40/C60
(13,100/17,100/20,000 Nominal Lumens)

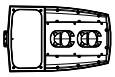

PRV-XL-C75/C100/C125
(26,100/31,000/36,300 Nominal Lumens)

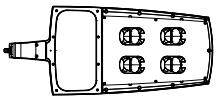

PRV-XL-C150/C175
(41,100/48,600 Nominal Lumens)

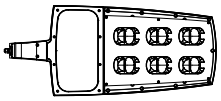

PRV-M-PA6X
(50,000/60,000/70,000/80,000 Nominal Lumens)

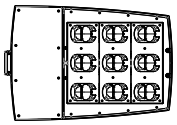

Optical Distributions

T2
(Type II)

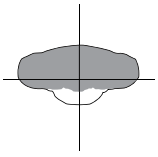

T3
(Type III)

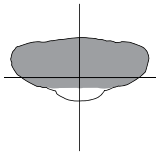

T4
(Type IV)

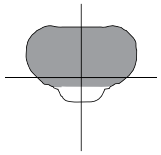

T5
(Type V)

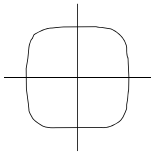

= Distribution with House Side Shield (HSS)

= Optical Distribution

Product Specifications

Construction
- Single-piece die-cast aluminum housing
- Tethered die-cast aluminum door

Optics
- Dark Sky Approved (3000K CCT and warmer only)
- Precision molded polycarbonate optics

Electrical
- -40°C minimum operating temperature
- 40°C maximum operating temperature
- >.9 power factor
- <20% total harmonic distortion
- Class 1 electronic drivers have expected life of 100,000 hours with <1% failure rate
- 0-10V dimming driver is standard with leads external to the fixture
- Standard MOV surge protective device designed to withstand 10kV of transient line surge
- Luminaire available with the field adjustable dimming controller (FADC) to manually adjust wattage and reduce the total lumen output and light levels. Comes pre-set to the highest position at the lumen output selected.

Mounting
- Versatile, patented, standard mount arm accommodates multiple drill patterns ranging from 1-1/2" to 4-7/8" (Type M drilling recommended for new installations)
- A knock-out on the standard mounting arm enables round pole mounting
- Adjustable pole and wall mount arms adjust in 5° increments from 0° to 60°; Downward facing orientation only (Type N drilling required for ADJA mount)
- Adjustable slipfitter arm adjusts in 5° increments from -5° to 85°; Downward facing orientation only
- Adjustable Arms: 1.5G vibration rated
- Prevail and Prevail Petite: 3G vibration rated
- Prevail XL Mast Arm: 3G vibration rated
- Prevail XL Standard Arm: 1.5G vibration rated

Typical Applications
- Parking lots, Walkways, Roadways and Building Areas

Finish
- Five-stage super TGIC polyester powder coat paint, 2.5 mil nominal thickness
- Finish is compliant to 3,000 hour salt spray standard (per ASTM B117)

Shipping Data
- Prevail Petite: 18 lbs. (7.94 kgs.)
- Prevail: 20 lbs. (9.09 kgs.)
- Prevail XL: 45 lbs. (20.41 kgs.)
- Prevail Maxx: 49 lbs. (22.23 kgs.)

Warranty
- Five year limited warranty, consult website for details. www.cooperlighting.com/legal

Energy and Performance Data

View PRV-P IES files | View PRV IES files | View PRV-XL IES files

Power and Lumens

Product Family		Prevail Petite				Prevail				Prevail XL					Prevail Maxx			
Light Engine		C10	C15	C20	C25	C15	C25	C40	C60	C75	C100	C125	C150	C175	C200	C225	C250	C275
Power (Watts)		35	49	73	94	52	96	131	153	176	217	264	285	346	346	418	487	588
Input Current @ 120V (A)		0.29	0.41	0.61	0.79	0.43	0.80	1.09	1.32	1.50	1.84	2.21	2.38	2.92	2.89	3.49	4.06	4.90
Input Current @ 277V (A)		0.13	0.18	0.27	0.35	0.19	0.35	0.48	0.57	0.66	0.82	0.97	1.04	1.25	1.26	1.51	1.72	2.06
Input Current @ 347V (A)		0.11	0.16	0.23	0.29	0.17	0.30	0.41	0.48	0.54	0.66	0.79	0.84	1.02	1.00	1.21	1.40	1.70
Input Current @ 480V (A)		0.08	0.12	0.17	0.22	0.12	0.22	0.30	0.35	0.40	0.48	0.57	0.62	0.74	0.73	0.88	1.00	1.21
Distribution [1]																		
Type II	4000K Lumens	4,775	6,717	9,542	11,521	7,123	13,205	17,172	20,083	26,263	31,231	36,503	41,349	48,876	50,349	59,444	68,447	79,322
	BUG Rating	B1-U0-G1	B1-U0-G1	B2-U0-G2	B2-U0-G2	B2-U0-G2	B2-U0-G2	B3-U0-G3	B3-U0-G3	B3-U0-G3	B3-U0-G4	B4-U0-G4	B4-U0-G4	B4-U0-G5	B4-U0-G5	B4-U0-G5	B4-U0-G5	B5-U0-G5
	Lumens per Watt	138	137	131	122	137	138	131	131	149	144	138	145	141	146	142	141	135
	3000K Lumens [1]	4,869	6,595	9,369	11,312	6,994	12,965	16,860	19,718	25,786	30,664	35,840	40,598	47,989	49,437	58,368	67,208	77,886
Type III	4000K Lumens	4,782	6,727	9,556	11,538	7,111	13,183	17,144	20,050	26,120	31,061	36,304	41,124	48,610	50,162	59,223	68,193	79,027
	BUG Rating	B1-U0-G2	B1-U0-G2	B2-U0-G3	B2-U0-G3	B1-U0-G2	B2-U0-G3	B3-U0-G4	B3-U0-G4	B3-U0-G5	B3-U0-G5	B3-U0-G5	B4-U0-G5	B4-U0-G5	B4-U0-G5	B4-U0-G5	B5-U0-G5	B5-U0-G5
	Lumens per Watt	138	137	131	123	137	137	131	131	148	143	138	144	140	145	142	140	135
	3000K Lumens [1]	4,695	6,605	9,383	11,329	6,982	12,944	16,832	19,686	25,646	30,497	35,645	40,377	47,727	49,254	58,151	66,958	77,596
Type IV	4000K Lumens	4,880	6,865	9,752	11,774	7,088	13,140	17,087	19,984	26,098	31,035	36,274	41,089	48,569	50,575	59,711	68,754	79,678
	BUG Rating	B1-U0-G2	B1-U0-G2	B2-U0-G3	B2-U0-G3	B1-U0-G3	B2-U0-G4	B2-U0-G4	B3-U0-G5	B3-U0-G5	B3-U0-G5	B3-U0-G5	B3-U0-G5	B4-U0-G5	B4-U0-G5	B4-U0-G5	B4-U0-G5	B5-U0-G5
	Lumens per Watt	141	140	134	125	136	137	130	131	148	143	137	144	140	146	143	141	136
	3000K Lumens [1]	4,792	6,740	9,575	11,561	6,959	12,901	16,777	19,621	25,624	30,471	35,615	40,343	47,687	49,659	58,630	67,510	78,235
Type V	4000K Lumens	5,067	7,128	10,126	12,226	7,576	14,045	18,264	21,360	28,129	33,450	39,097	44,287	52,349	53,531	63,201	72,773	84,335
	BUG Rating	B3-U0-G2	B3-U0-G2	B4-U0-G3	B4-U0-G3	B3-U0-G3	B4-U0-G3	B4-U0-G4	B5-U0-G4	B5-U0-G5	B5-U0-G5	B5-U0-G5	B5-U0-G5	B5-U0-G5	B5-U0-G5	B5-U0-G5	B5-U0-G5	B5-U0-G5
	Lumens per Watt	146	145	139	130	146	146	139	140	160	154	148	155	151	155	151	150	144
	3000K Lumens [1]	4,975	6,999	9,942	12,004	7,438	13,790	17,932	20,972	27,618	32,843	38,387	43,483	51,398	52,562	62,057	71,455	82,808

NOTES:
1. For 3000K, 5000K or HSS data, refer to published IES files.

Lumen Maintenance

Configuration	TM-21 Lumen Maintenance (50,000 Hours)	Theoretical L70 (Hours)
Prevail and Prevail Petite at 25°C	91.30%	> 194,000
Prevail and Prevail Petite at 40°C	87.59%	> 134,000
Prevail XL at 25°C	91.40%	> 204,000
Prevail XL at 40°C	89.41%	> 158,000
Prevail Maxx at 25°C	91.40%	> 204,000
Prevail Maxx at 40°C	89.41%	> 158,000

Lumen Multiplier

Ambient Temperature	Lumen Multiplier
10°C	**1.02**
15°C	**1.01**
25°C	**1.00**
40°C	**0.99**

Sensor Color Reference Table (SPBx)

Housing Finish	Sensor Color
AP=Grey	Grey
BZ=Bronze	Bronze
BK=Black	Black
DP=Dark Platinum	Grey
GM=Graphite Metallic	Black
WH=White	White

FADC Settings

FADC Position	Lumen Multiplier
1	25%
2	46%
3	55%
4	62%
5	72%
6	77%
7	82%
8	85%
9	90%
10	100%

Note: +/-5% typical value

Control Options

0-10V This fixture provides 0-10V dimming wire leads for use with a lighting control panel or other control method.

Photocontrol (PR and PR7) Photocontrol receptacles provide a flexible solution to enable "dusk-to-dawn" lighting by sensing light levels. Advanced control systems compatible with NEMA 7-PIN standards can be utilized with the PR7 receptacles.

Dimming Occupancy Sensor (SPB, MS/DIM-LXX) These sensors are factory installed in the luminaire housing. When the SPB or MS/DIM sensor options are selected, the luminaire will dim down after five minutes of no activity detected. When activity is detected, the luminaire returns to full light output. These occupancy sensors include an integral photocell for "dusk-to-dawn" control or "daylight harvesting." Factory default is enabled for the MS sensors and disabled for the SPB. SPB motion sensors require the Sensor Configuration mobile application by Wattstopper to change factory default dimming level, time delay, sensitivity and other parameters. Available for iOS and Android devices. The SPB sensor is factory preset to dim down to approximately 10% power with a time delay of five minutes.

For mounting heights up to 8' (SPB1, -L08)

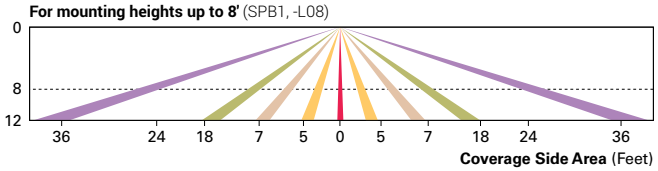

For mounting heights up to 20' (SPB2, -L20)

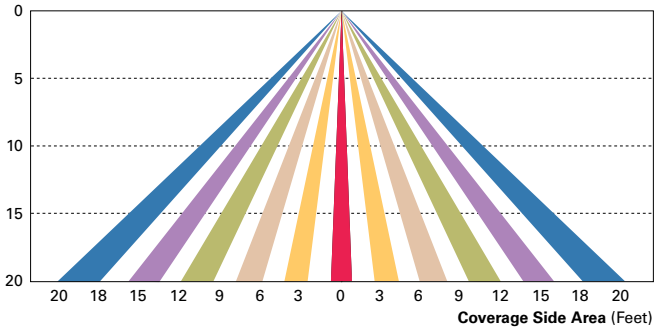

For mounting heights up to 40' (SPB4, -L40W)

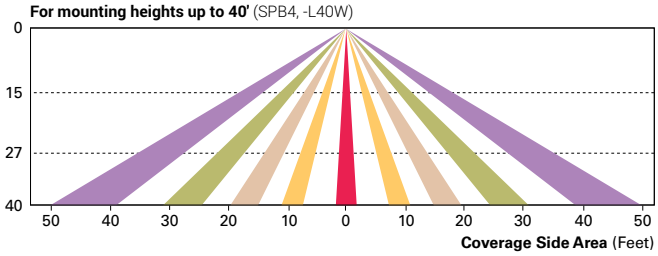

WaveLinx Wireless Control and Monitoring System Available in 7-PIN or 4-PIN configurations, the WaveLinx Outdoor control platform operates on a wireless mesh network based on IEEE 802.15.4 standards enabling wireless control of outdoor lighting. At least one Wireless Area Controller (WAC) is required for full functionality and remote communication (including adjustment of any factory pre-sets).

WaveLinx Outdoor Control Module (WOLC-7P-10A) A photocontrol that enables astronomic or time-based schedules to provide ON, OFF and dimming control of fixtures utilizing a 7-PIN receptacle. The out-of-box functionality is ON at dusk and OFF at dawn.

WaveLinx Wireless Sensor (WPS2 and WPS4) These outdoor sensors offer passive infrared (PIR) occupancy sensing and a photocell for closed-loop daylight sensing. These sensors are factory preset to dim down to approximately 50 percent power after 15 minutes of no activity detected, and the photocell for "dusk-to-dawn" control is default enabled. A variety of sensor lenses are available to optimize the coverage pattern for mounting heights from 7'-40'.

For mounting heights from 16' to 40' (WPS)

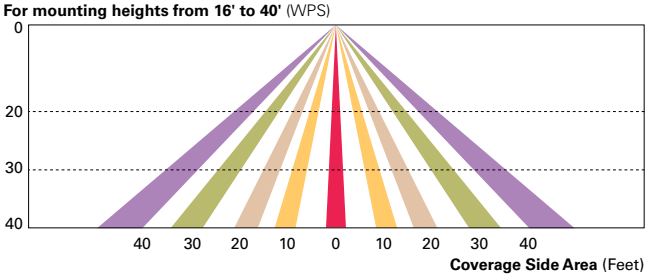

LumenSafe (LD) The LumenSafe integrated network camera is a streamlined, outdoor-ready camera that provides high definition video surveillance. This IP camera solution is optimally designed to integrate into virtually any video management system or security software platform of choice. No additional wiring is needed beyond providing line power to the luminaire. LumenSafe features factory-installed power and networking gear in a variety of networking options allowing security integrators to design the optimal solution for active surveillance.

Cooper Lighting Solutions
1121 Highway 74 South
Peachtree City, GA 30269
P: 770-486-4800
www.cooperlighting.com

© 2024 Cooper Lighting Solutions
All Rights Reserved.

Specifications and dimensions
subject to change without notice.

city of CREVE COEUR

300 North New Ballas Road • Creve Coeur, Missouri 63141

(314) 432-6000 • Fax (314) 872-2539

APPLICATION TO PLANNING AND ZONING COMMISSION #24-038: A SITE DEVELOPMENT PLAN FOR THE COMMERCIAL USE OF A SINGLE-FAMILY STRUCTURE FOR A HAIR SALON, CURL SANCTUARY, LOCATED AT 11144-11148 OLIVE BOULEVARD

FOR THE MEETING OF: Tuesday, January 21, 2025

LOCATION: 11144-11148 Olive Boulevard. Zoned "C" Single-Family Zoning District.

REQUEST: Jessica McTaggart, of Curl Sanctuary, LLC, has submitted an application for a site development plan to allow for Curl Sanctuary, a hair salon, to operate as a commercial use within a single-family structure located at 11144-11148 Olive Boulevard. The structure was previously used as an animal skin care clinic. The applicant will not be making any changes to the site or appearance of the structure for their use. Hours of operation will be from 10:00 AM to 7:00 PM Monday-Friday and 10:00 AM to 3:00 PM on Saturdays with 3 employees.

ADDITIONAL INFORMATION: The property is in the "C" Single-Family Residential zoning district which allows for limited non-residential uses on state highway frontage when subject to the requirements outlined in Section 405.450(F) through Site Development Plan approval by the Planning and Zoning Commission. City Council action is not required.

Key Issues:
- Does the request further the goals and/or implement the Comprehensive Plan?
- Is the request consistent with the requirements for site development plans?

Creve Coeur 2030 Comprehensive Plan References
- Neighborhood Commercial District
- Design Guidelines

Zoning Code References
- Section 405.270: "C" Single-Family Residential Zoning District
- Section 405.450: Permitted Uses
- Section 405.1080: Site Concept, Site Development and Minor Site Plan Approval

APPLICANT: Jessica McTaggart
Curl Sanctuary, LLC
2607 Plantation Point
St. Charles, MO 63303

PROPERTY OWNER: The Animal Skin Clinic, LLC
3 Deer Creek Woods
St. Louis, MO 63124

REPORT PREPARED BY: Bethany L. Moore, AICP, City Planner
DATE: 1/13/2025
ATTACHMENTS: Applicant's Materials Received 12/20/24

BACKGROUND AND PROJECT DESCRIPTION

The Applicant is seeking to purchase the building located at 11144-11148 Olive Blvd. in order to operate her hair salon business, Curl Sanctuary, out of the building. The building is a single-family residential building that was previously converted to commercial use several decades ago and is zoned "C' Single-Family Residential. According to county records, the property is located within the Lashley Estate Subdivision; however, staff is of the understanding that this subdivision does not have any indentures. The previous use of the building was for the Animal Skin Clinic of St. Louis which had been in operation in this location for more than 15 years. The applicant is seeking to convert the interior into a salon space for her business and no changes are proposed to the building's exterior or site. Although the building's conversion from residential to commercial use has already taken place, the change in the use requires Planning and Zoning Commission review and approval. Section 405.270(D) allows for Non-Residential Uses on State Highway Frontage as part of a Site Development Plan approval by the Planning and Zoning Commission subject to the requirements laid out in Section 405.450 (F) *Commercial Uses of Single-Family Residential Structures.* The interior layout will have 6 stations to accommodate 3 to 4 stylists. There are 3 employees at the busiest shift with hours of operation from 10:00 AM to 7:00 PM Monday through Friday and 10:00 AM to 3:00 PM on Saturdays.

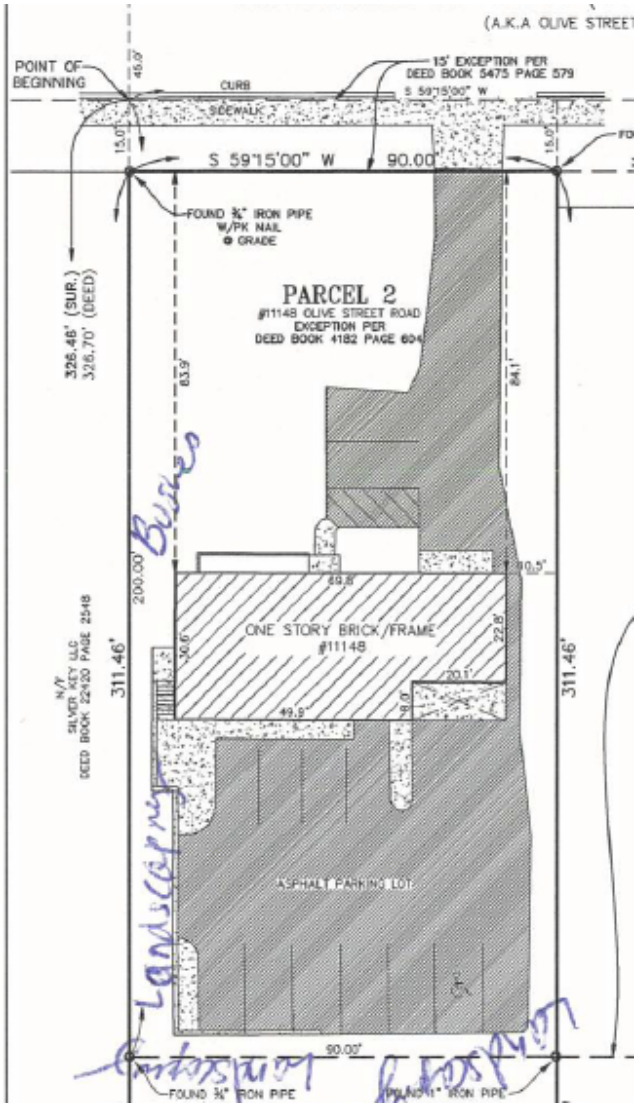

Figure 1: Site Plan.

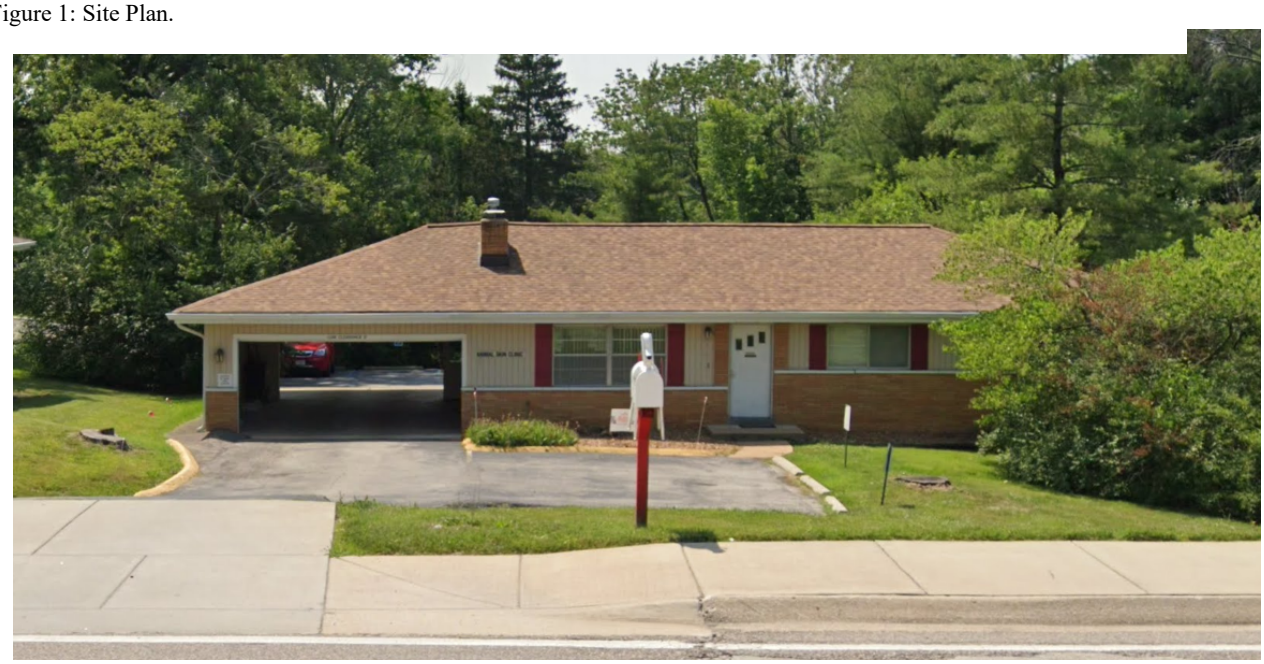

Figure 2: Google Street View of 11144-11148 Olive Boulevard.

Figure 3: 11144-11148 Olive Boulevard highlighted.

LAND USE AND ZONING OF SURROUNDING PROPERTIES
The adjacent zoning and land uses are as follows:

DIRECTION	USE	ZONED	SEPARATED BY
North	Single-Family Residences	C-Single Family Residential	Olive Boulevard
South	Single-Family Residences	C-Single Family Residential	N/A
East	Commercial Use in Single-Family Residence	C-Single Family Residential	N/A
West	Single-Family Residence	C-Single Family Residential	N/A

COMPREHENSIVE PLAN REVIEW
Creve Coeur 2030 Plan
The Neighborhood Commercial District is comprised of the properties along Olive Boulevard within the East Olive Corridor. It supports the development of a variety of medium-low density commercial and neighborhood service businesses with shallow lot depths adjacent to established subdivisions. The East Olive Corridor serves as a transition between the more intense commercial districts to the east and west and is ideal for specialty retail and service businesses. This corridor faces special challenges specifically for residential properties directly adjacent to Olive Boulevard that are subject to subdivision indentures dictating their use. The subject property is a residential structure directly adjacent to Olive Boulevard that has been converted for commercial use and is not subject to any subdivision indentures. The property has been an active commercial use for several decades and the applicant is not proposing any changes to the exterior appearance or site of the property. Although the applicant's use of a hair salon is a different use than the previous use as a veterinary clinic, the commercial use of the property is still directly correlated to the goals of the Neighborhood Commercial District.

DESIGN GUIDELINES REVIEW
The Design Guidelines recommend that open asphalt parking lots be broken up into smaller, palatable spaces buffered with landscaping, especially in front of buildings and encourages parking to be located to the side or rear of the building (p.19.) Setbacks should be landscaped in order to act as a buffer between buildings and between the building and the street for a more pleasing view to and from the building. Screening of unfavorable views is recommended (p.15.). The subject property is already developed and converted for commercial use with an existing asphalt parking lot including three parking spaces in front of the residential and more parking behind the building. The applicant is not proposing to make any changes to the existing configuration or to comply with the recommendations of the Design Guidelines. The property appears to be sufficiently screened from the adjacent single-family residences; however, the front landscaping does not appear to be well-maintained and would benefit from new landscaping. Staff recommends additional landscaping should be required in the front of the building to improve the appearance of the property as viewed from Olive Blvd.

ZONING REVIEW

Section 405.450(F) *Commercial Uses of Single-Family Residential Structures* regulates the requirements through site development plan approval for the use and conversion of existing single-family residential structures located within the "A", "B", "C", "D", and "AR" residential districts for office or certain prescribed retail service uses.

The following specific standards shall be satisfied for any such authorization which shall be granted only for a specifically proposed usage.

1. *Permitted uses by site development plan approval.*

a. Professional, business, governmental or institutional office use including medical offices or clinics and financial institutions, but excluding freestanding drive-in banking facilities.

b. Retail services of a business or educational nature including adult day care center and child group day care home or family day care home as defined by the Missouri Division of Family Services, with a maximum of twenty (20) children permitted, excluding the sale of any goods at retail or wholesale, to be specifically approved on an individual use basis and subject to revocation of the authorization in the event such use, when in effect, is found by the City Council to create any nuisance for surrounding residences or businesses.

2. *Minimum site size.* A lot shall conform with the lot size requirements of the district within which it is located.

3. *Front setback.* No vehicle parking or any new or any addition to any existing structure shall be located within fifty (50) feet of the front lot line. The resulting front yard shall be landscaped including lawn, ground cover, ornamental trees and shrubbery and street trees.

4. *Parking.* See Article VII.

5. *Coverage.* Not more than fifty percent (50%) of the surface of a lot shall be occupied by buildings, driveways or parking surface. The balance of the site shall be maintained in lawn and landscaping.

6. *Buffering.* Any side or rear yard adjacent to any single-family residential property not eligible for the application of this provision shall maintain a minimum landscaped buffer equal in width to the side and rear yard requirements of the district in which it is located, together with a six (6) foot solid fence. All other yards abutting residential property eligible for this provision may be required to have a five (5) foot landscaped buffer on the outside of a six (6) foot solid fence.

7. *Signs.* Signs shall be limited to a maximum gross area as allowed by Section 405.940(D) Single-Family Lots Fronting on a Numerically Designated State Highway. All freestanding low monument signs shall be incorporated into the residential landscape subject to the appearance requirements of this Section.

8. *Appearance.* All owners of property choosing to utilize this provision shall maintain said property in a manner which is compatible with surrounding residential neighborhoods of

the City of Creve Coeur and in conformance with the appearance of residential occupancy. No modification of the size or bulk of the structure or of its appearance can be undertaken without the prior approval of the Planning and Zoning Commission.

9. *Affect of an RDD.* The regulations of Subsections (E)(2), (3), (5) and (6) of this Section may be modified through a residential design development as permitted by Section 405.450(C), Residential Design Development Procedure.

The applicant's commercial use, a hair salon, falls under the uses allowed per Section 405.450(F)(1).The size of the lot meets the lot size requirements for lots within the "C" zoning district. The existing parking lot area is mostly confined to the rear of the lot but there are three spaces in front of the building which are located approximately 45-47 feet from the front property line directly adjacent to Olive Boulevard which is just short of the 50 feet required by Section 405.450(F)(3). Due to the fact that the parking has been in this location for many years and the applicant will not be increasing the size of the existing parking lot, Staff does not see an issue with maintaining the existing parking location. However, there is no existing landscaping or street trees between the parking area and Olive Boulevard. There is a significant grade change that slopes toward the house, away from Olive Boulevard, which does not appear to be conducive to supporting the planting of street trees but there does appear to be other areas in the front yard and adjacent to the building to provide additional trees and shrubs. Staff recommends that a condition of approval be added to submit a landscape plan for staff approval that provides additional landscaping in the front yard. The existing site coverage appears to be very near or perhaps exceeds the 50% maximum due to the parking lot at the rear of the parcel but given that the site coverage is existing, and the applicant is not planning to increase it, Staff does not see this as a concern. The subject property is adjacent to two single-family residential lots that are also eligible for this conversion of use. The property directly east at 11142 Olive Boulevard is currently operating as a real estate office; therefore, no fence or additional landscaped buffering is needed unless it is deemed necessary by the Planning and Zoning Commission. Signage is reviewed at a staff level under a separate permit.

SUMMARY AND RECOMMENDED CONDITIONS FOR APPROVAL

The request for a Site Development Plan for the commercial use of a single-family residential structure along Olive Boulevard appears to meet the majority of the requirements of the Zoning Ordinance and goals and objectives of the Comprehensive Plan and Design Guidelines as proposed subject to additional landscaping as discussed in this report. If the Planning and Zoning Commission believes that the proposed plan and use as a salon will not result in any substantial increase in traffic or fire hazard or traffic congestion; will not adversely affect the character of the neighborhood or the general welfare of the community; and will not overtax public utilities, facilities or services, Staff recommends the approval be subject to the conditions below, pending any additional amendments as discussed at the meeting:

1. A landscape plan that provides trees and shrubs within the front yard shall be submitted to staff for approval and prior to issuance of a final occupancy permit.
2. The new landscaping and the existing landscaping located to the sides and rear of the property shall be maintained to provide screening of the commercial use to adjacent single family uses. Any changes to these conditions will require replacement landscaping to be approved by staff.
3. The existing parking lots are to be resealed and restriped prior to final occupancy approval.

MOTION

The following is an example of an appropriate motion for this application:

> "I move to recommend approval of a Site Development Plan for Curl Sanctuary located at 11144-11148 Olive Boulevard, subject to the conditions discussed in the Staff Report for the meeting of January 21, 2025" (conditions may be added, eliminated, or modified by preceding motion).

APPENDIX 1: COMPREHENSIVE PLAN, INCLUDING DESIGN GUIDELINES

Included and attached by reference. See body of report for specific excerpts.

APPENDIX 2: ZONING CODE

Included and attached by reference. See body of report for specific excerpts.

APPENDIX 3: AERIAL PHOTO

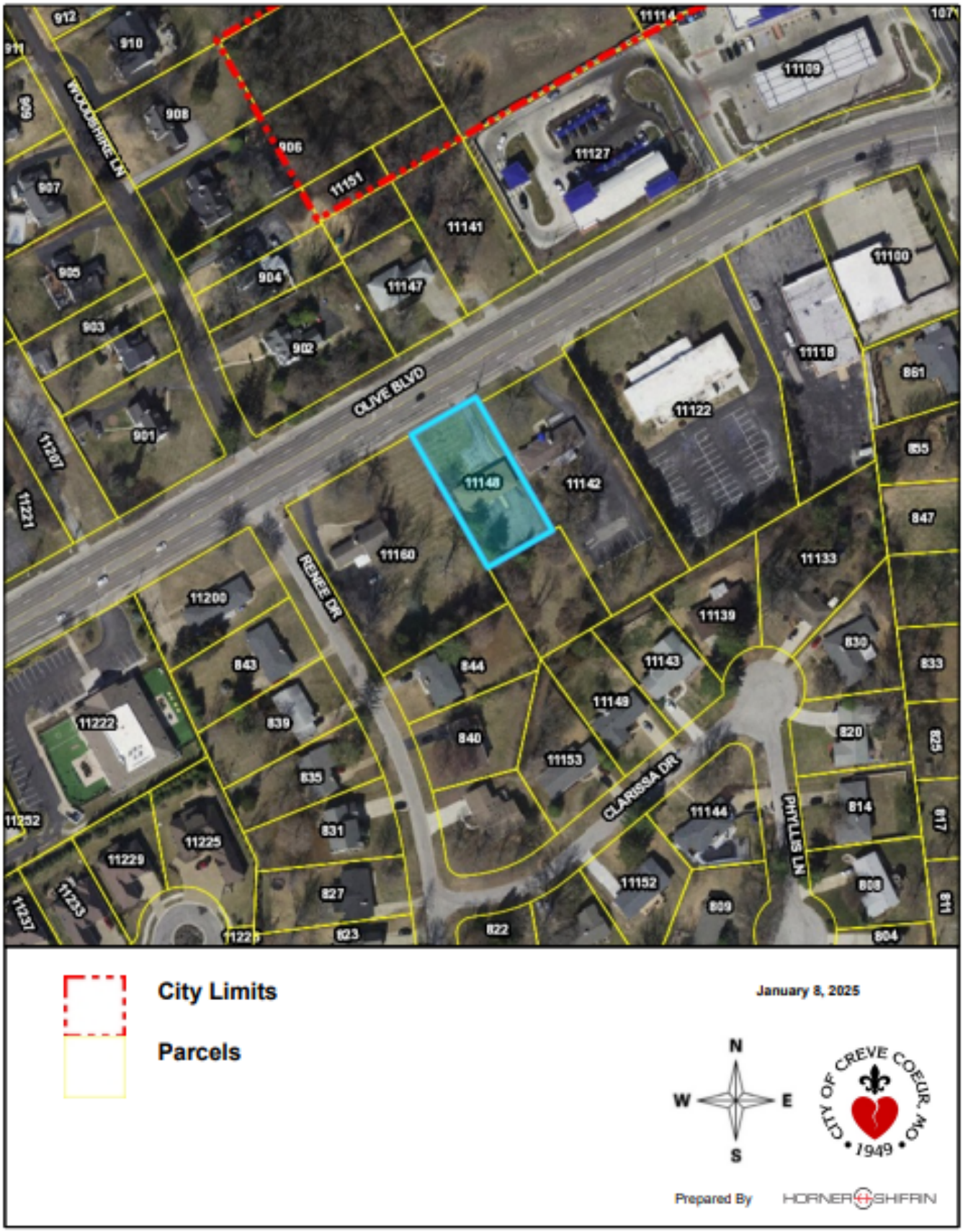

APPENDIX 4: SITE PHOTOGRAPHS	Applicant's Photos
	Description: Rear parking area.
	Description: Interior view.

	Description: Interior.
	Description: Interior.

city of CREVE COEUR
PLANNING DIVISION
300 North New Ballas Road, Creve Coeur, Missouri 63141
Tel. (314) 872-2501 • Fax (314) 872-2505

PLANNING AND ZONING COMMISSION AGENDA APPLICATION
SITE DEVELOPMENT PLAN

Select Project Type: **Site Development Plan** ☐ **Site Concept Plan** ☐ **Minor Site Plan** ☐

Title of Project: Curl Sanctuary LLC

Location of Project: 11144-11148 Olive Blvd Creve Couer, MO ***Locator #*** _____

Subject for Agenda: Converting to salon space from Vet office in home on Olive

Applicant:

Architect ☐ ***Engineer*** ☐ ***Contractor*** ☐ ***Agent*** ☐ ***Owner*** ☑

Applicant:	***Applicant's Representative*** *(if applicable)*:
Jessica McTaggart *Name*	*Name*
Curl Sanctuary LLC *Company (If Applicable)*	*Company (If Applicable)*
2607 Plantation Point *Address*	*Address*
St. Charles, Mo 63303 *Address*	*Address*
Telephone # 314-550-2028	*Telephone #*
Fax #	*Fax #*
Email: Jessica@curlsanctuary.com	*Email:*
Applicant's Signature	***Applicant's Representative's Signature***

Owner's Acknowledgement *(if different from applicant)*:

Name *Company (If Applicable)*

Address

Phone *Fax* *Email*

Applicant's Signature

Description of Request (attach additional sheets as needed)

General Description: I will be using this space as a small salon space with 6 stations to be use by 3-4 stylists. We cater to the curly hair community and many of our clients are local which is why we would like to make Creve Couer our permanent home for our salon. We have leased in the area for the last 11 years.

Mon ~~Sat~~ Fri 10-7 Sat 10-3

3 employees currently

Rationale

Please describe in detail, on an attached sheet, the reasons why you believe the request should be approved and what steps are being taken to lessen any impacts on surrounding residences and businesses. An explanation of the building and landscape designs (if changes are proposed) should also be included.

We are serving the community of Creve Couer and its residents. This shouldn't add to traffic on the road much as we rarely see more than 10-15 clients daily and we are often serving current residents. we will not be changing any of the current structure or landscaping unless needed to meet code for the property. This property is in need of updates(plumbing + electric) to meet current standards in order to keep our clients and surrounding properties safe. We are looking forward to keeping everything well maintained and beautiful in order to keep up with the reputation of Creve Couer and this is also what draws us to wanting to have our business in your city

Submittal Checklist

☐ Rationale	☐ Building elevations for new construction
☐ Site plan 4 hard copies	☐ Photographs of existing structures
☐ Access and parking plan-4 hard copies; (may be shown on site plan)	☐ Materials samples for Commission review
	☐ Legal Description in Word format
☐ Landscape plan 4 hard copies	☐ Fees: $250 (non-refundable)
☐ Floor plan 4 hard copies	$2000 (refundable deposit)
☐ Electronic copies of all materials	☐ Other items as requested by staff

Preferred Public Hearing Date: Monday, Jan ***, 20*** 25.

*****Confirm schedule and available meeting dates with Planning Division staff*****

Office Use Only	
____ **All Sections Complete**	Received By:
____ **All Documents, incl. e-Copies**	_____
____ **Fees Paid**	Date:_____

Revised: 7/22

"PROPERTY BOUNDARY SURVEY"

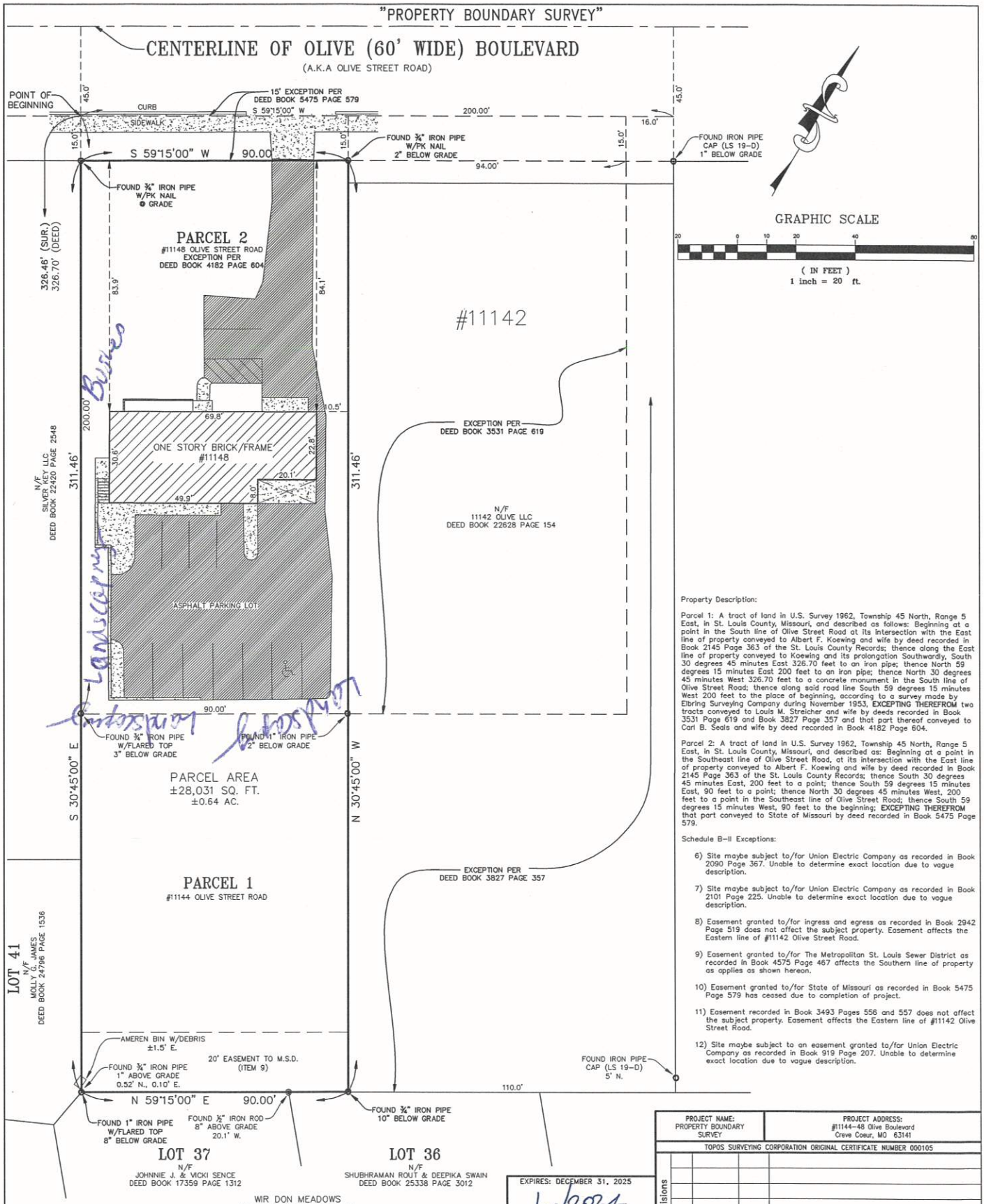

Property Description:

Parcel 1: A tract of land in U.S. Survey 1962, Township 45 North, Range 5 East, in St. Louis County, Missouri, and described as follows: Beginning at a point in the South line of Olive Street Road at its intersection with the East line of property conveyed to Albert F. Koewing and wife by deed recorded in Book 2145 Page 363 of the St. Louis County Records; thence along the East line of property conveyed to Koewing and its prolongation Southwardly, South 30 degrees 45 minutes East 326.70 feet to an iron pipe; thence North 59 degrees 15 minutes East 200 feet to an iron pipe; thence North 30 degrees 45 minutes West 326.70 feet to a concrete monument in the South line of Olive Street Road; thence along said road line South 59 degrees 15 minutes West 200 feet to the place of beginning, according to a survey made by Elbring Surveying Company during November 1953, **EXCEPTING THEREFROM** two tracts conveyed to Louis M. Streicher and wife by deeds recorded in Book 3531 Page 619 and Book 3827 Page 357 and that part thereof conveyed to Carl B. Seals and wife by deed recorded in Book 4182 Page 604.

Parcel 2: A tract of land in U.S. Survey 1962, Township 45 North, Range 5 East, in St. Louis County, Missouri, and described as: Beginning at a point in the Southeast line of Olive Street Road, at its intersection with the East line of property conveyed to Albert F. Koewing and wife by deed recorded in Book 2145 Page 363 of the St. Louis County Records; thence South 30 degrees 45 minutes East, 200 feet to a point; thence South 59 degrees 15 minutes East, 90 feet to a point; thence North 30 degrees 45 minutes West, 200 feet to a point in the Southeast line of Olive Street Road; thence South 59 degrees 15 minutes West, 90 feet to the beginning; **EXCEPTING THEREFROM** that part conveyed to State of Missouri by deed recorded in Book 5475 Page 579.

Schedule B-II Exceptions:

6) Site maybe subject to/for Union Electric Company as recorded in Book 2090 Page 367. Unable to determine exact location due to vague description.

7) Site maybe subject to/for Union Electric Company as recorded in Book 2101 Page 225. Unable to determine exact location due to vague description.

8) Easement granted to/for ingress and egress as recorded in Book 2942 Page 519 does not affect the subject property. Easement affects the Eastern line of #11142 Olive Street Road.

9) Easement granted to/for The Metropolitan St. Louis Sewer District as recorded in Book 4575 Page 467 affects the Southern line of property as applies as shown hereon.

10) Easement granted to/for State of Missouri as recorded in Book 5475 Page 579 has ceased due to completion of project.

11) Easement recorded in Book 3493 Pages 556 and 557 does not affect the subject property. Easement affects the Eastern line of #11142 Olive Street Road.

12) Site maybe subject to an easement granted to/for Union Electric Company as recorded in Book 919 Page 207. Unable to determine exact location due to vague description.

Source of Title: Westcor Land Title Insurance Company – File No. 780884, Commitment Date: November 8, 2024 at 2:18 PM

This is to certify that we, Topos Surveying Corporation, at the request and for the exclusive use of **Jessica McTaggart** and Investors Title Company have on the 18th day of December, 2024, executed a Property Boundary Survey in accordance with the current Missouri Standards for Property Boundary Surveys as established by the Missouri Board for Architects, Professional Engineers, and Professional Land Surveyors and Landscape Architects, on a Tract of Land being **described hereon**, and that the results of said survey are represented upon this plat. The subject property is an URBAN property as defined in said Standards. The bearing reference system and easements unless referenced are taken from the record plat. This plat may not show current zoning setbacks. **This Property Boundary Survey is Non-Transferable.**

EXPIRES: DECEMBER 31, 2025

12/20/2024

STATE OF MISSOURI
PHILLIP JOSEPH WURM
NUMBER PLS-2278
PROFESSIONAL LAND SURVEYOR

PHILLIP J. WURM
MO. REGISTRATION NO. PLS – 2278

PROJECT NAME: PROPERTY BOUNDARY SURVEY	PROJECT ADDRESS: #11144-48 Olive Boulevard Creve Coeur, MO 63141

TOPOS SURVEYING CORPORATION ORIGINAL CERTIFICATE NUMBER 000105

Revisions

No.	Date	By	Description

TOPOS SURVEYING CORP

790 RUE ST. FRANCOIS
FLORISSANT, MISSOURI 63031
Phone (314) 838-5806
Fax (314) 838-8141

Drawn by: PAD	Checked by: PJW
Sur. by: KS	Date: 12/20/2024
Survey No. 1224-6	

"PROPERTY BOUNDARY SURVEY"

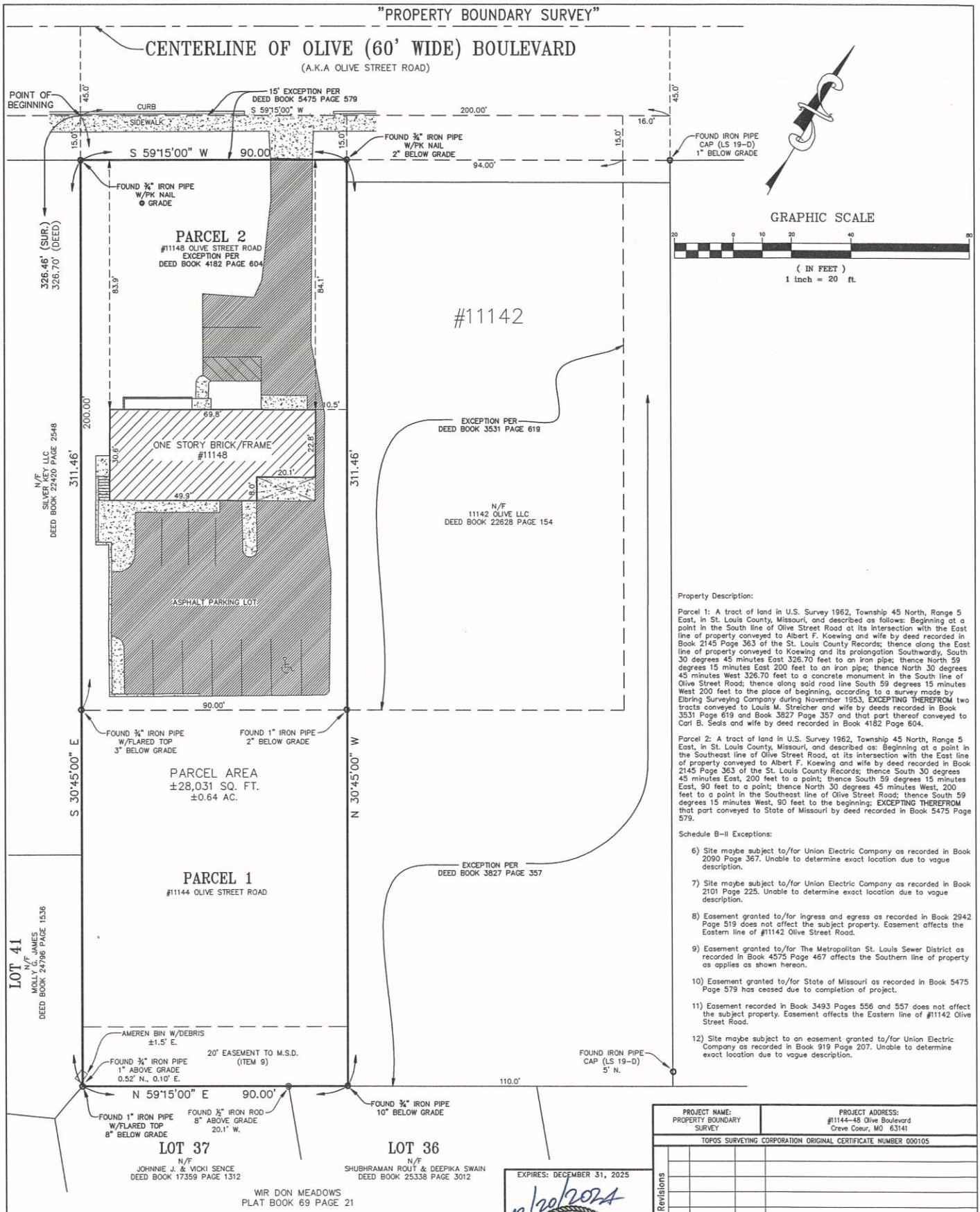

Property Description:

Parcel 1: A tract of land in U.S. Survey 1962, Township 45 North, Range 5 East, in St. Louis County, Missouri, and described as follows: Beginning at a point in the South line of Olive Street Road at its intersection with the East line of property conveyed to Albert F. Koewing and wife by deed recorded in Book 2145 Page 363 of the St. Louis County Records; thence along the East line of property conveyed to Koewing and its prolongation Southwardly, South 30 degrees 45 minutes East 326.70 feet to an iron pipe; thence North 59 degrees 15 minutes East 200 feet to an iron pipe; thence North 30 degrees 45 minutes West 326.70 feet to a concrete monument in the South line of Olive Street Road; thence along said road line South 59 degrees 15 minutes West 200 feet to the place of beginning, according to a survey made by Elbring Surveying Company during November 1953, **EXCEPTING THEREFROM** two tracts conveyed to Louis M. Streicher and wife by deeds recorded in Book 3531 Page 619 and Book 3827 Page 357 and that part thereof conveyed to Carl B. Seals and wife by deed recorded in Book 4182 Page 604.

Parcel 2: A tract of land in U.S. Survey 1962, Township 45 North, Range 5 East, in St. Louis County, Missouri, and described as: Beginning at a point in the Southeast line of Olive Street Road, at its intersection with the East line of property conveyed to Albert F. Koewing and wife by deed recorded in Book 2145 Page 363 of the St. Louis County Records; thence South 30 degrees 45 minutes East, 200 feet to a point; thence South 59 degrees 15 minutes East, 90 feet to a point; thence North 30 degrees 45 minutes West, 200 feet to a point in the Southeast line of Olive Street Road; thence South 59 degrees 15 minutes West, 90 feet to the beginning; **EXCEPTING THEREFROM** that part conveyed to State of Missouri by deed recorded in Book 5475 Page 579.

Schedule B-II Exceptions:

6) Site maybe subject to/for Union Electric Company as recorded in Book 2090 Page 367. Unable to determine exact location due to vague description.

7) Site maybe subject to/for Union Electric Company as recorded in Book 2101 Page 225. Unable to determine exact location due to vague description.

8) Easement granted to/for ingress and egress as recorded in Book 2942 Page 519 does not affect the subject property. Easement affects the Eastern line of #11142 Olive Street Road.

9) Easement granted to/for The Metropolitan St. Louis Sewer District as recorded in Book 4575 Page 467 affects the Southern line of property as applies as shown hereon.

10) Easement granted to/for State of Missouri as recorded in Book 5475 Page 579 has ceased due to completion of project.

11) Easement recorded in Book 3493 Pages 556 and 557 does not affect the subject property. Easement affects the Eastern line of #11142 Olive Street Road.

12) Site maybe subject to an easement granted to/for Union Electric Company as recorded in Book 919 Page 207. Unable to determine exact location due to vague description.

Source of Title: Westcor Land Title Insurance Company – File No. 780884, Commitment Date: November 8, 2024 at 2:18 PM

This is to certify that we, Topos Surveying Corporation, at the request and for the exclusive use of **Jessica McTaggart** and Investors Title Company have on the 18th day of December, 2024, executed a Property Boundary Survey in accordance with the current Missouri Standards for Property Boundary Surveys as established by the Missouri Board for Architects, Professional Engineers, and Professional Land Surveyors and Landscape Architects, on a Tract of Land being **described hereon**, and that the results of said survey are represented upon this plat. The subject property is an URBAN property as defined in said Standards. The bearing reference system and easements unless referenced are taken from the record plat. This plat may not show current zoning setbacks. **This Property Boundary Survey is Non-Transferable.**

EXPIRES: DECEMBER 31, 2025

12/20/2024

STATE OF MISSOURI
PHILLIP JOSEPH WURM
NUMBER PLS-2278
PROFESSIONAL LAND SURVEYOR

PHILLIP J. WURM
MO. REGISTRATION NO. PLS – 2278

PROJECT NAME: PROPERTY BOUNDARY SURVEY	PROJECT ADDRESS: #11144-48 Olive Boulevard Creve Coeur, MO 63141
TOPOS SURVEYING CORPORATION ORIGINAL CERTIFICATE NUMBER 000105	

Revisions

No.	Date	By	Description

790 RUE ST. FRANCOIS
FLORISSANT, MISSOURI 63031
Phone (314) 838-5806
Fax (314) 838-8141

TOPOS SURVEYING CORP

Drawn by: PAD	Checked by: PJW
Sur. by: KS	Date: 12/20/2024
Survey No. 1224-6	

Dont Have a current plan to Change landscaping.
Front view
1 Handi cap Space
2 truck parking
Would like to add
ADA Ramp here
+
refinish parking
lot that
currently
exsists.
LOW CLEARANCE 6'
ANIMAL SKIN CLINIC
CDA

Only flooring + can lights changing
13.2 X 14.8

Demo + make ada compliant

7.6 x 5.0

Shampoo Bowl
Shampoo Bowl
Shampoo Bowl
13.2 X 12.5

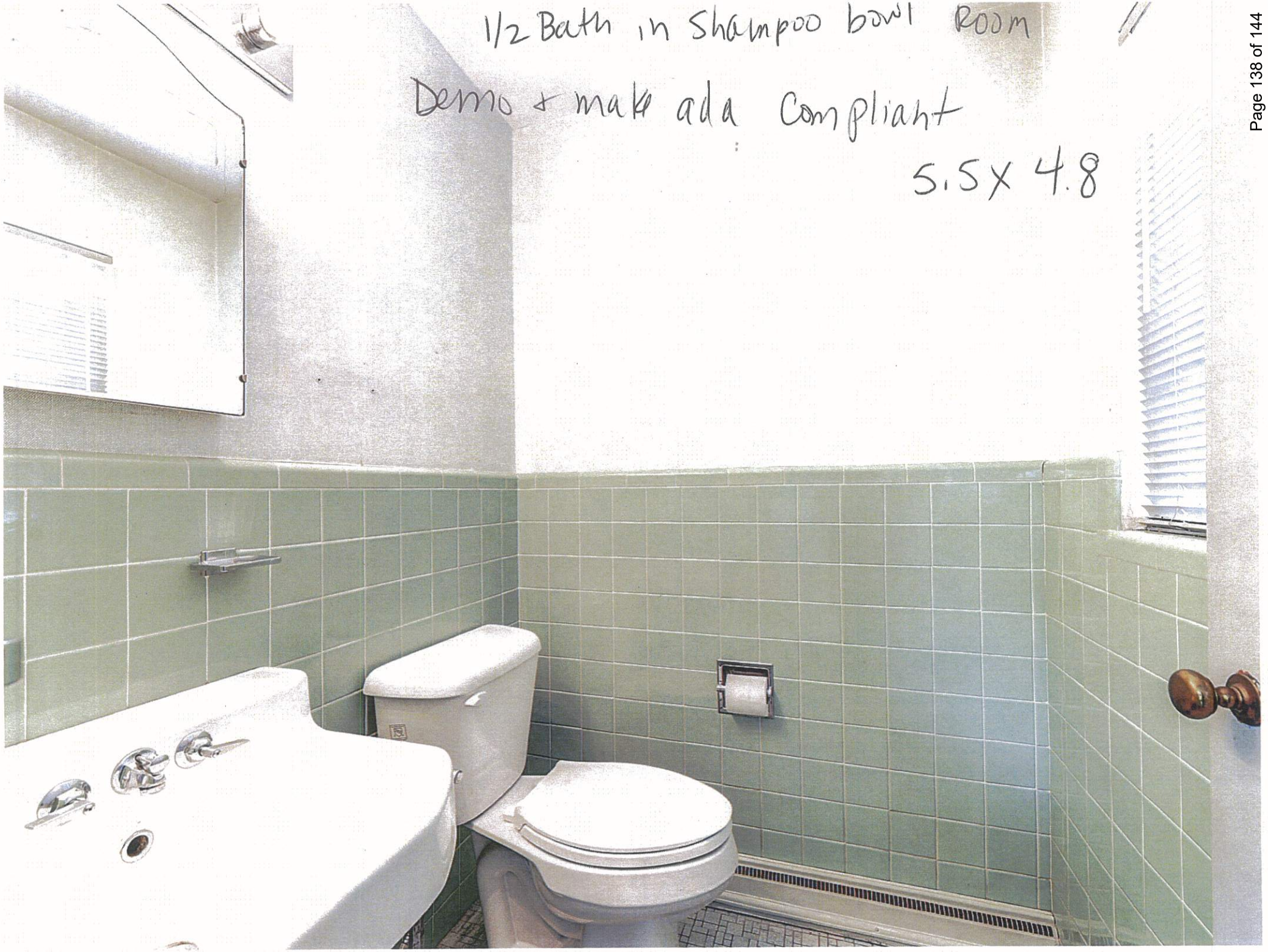
1/2 Bath in Shampoo bowl Room
Demo + make ada Compliant
5.5 X 4.8

12.5 x 12.6
Can lights
w/ 3 Color stations
Station 1
Station 2
Station 3

New Flooring
Can lights
3 cutting/styling stations
12x5 x 12x4
Station here
Station here
Station on outside wall

12 X 13.7
Reception area
only Flooring change
+
Can lights

Waiting area +
Retail Space
new lighting +
Flooring
ADA
entrance
20 X 15.5

Storage + Break area
No modification at this time
33X 28.7

Back parking
w/ 2 Handicap spaces
- Refinish Parking lot in exsisting space
- no changes proposed to
land scaping